Specifications

Item		Specification	
Master cylinder	Type	Tandem	
	Cylinder I.D.	23.81mm (0.94in)	
	Piston stroke	43±1mm (1.69±0.039in)	
	Fluid level switch	Provided	
Brake booster	Type	7" + 8" Tandem	
	Boosting ratio	9 : 1	
Front Disc brake	Caliper Type	General Disc Brake	Brembo Disc Brake
	Type	Ventilated disc	Ventilated disc
	Disc O.D	320mm(12.60in)	340mm(13.39in)
	Disc thickness	28mm(1.10in)	28mm(1.10in)
	Caliper piston	Single	4piston
	Cylinder I.D	Φ60mm(2.36in)	Φ(42mm+42mm(1.65in+1.65in))X2
Rear Disc brake	Caliper Type	General Disc Brake	Brembo Disc Brake
	Type	Solid disc	Ventilated disc
	Disc O.D	314mm(12.36in)	330mm(12.99in)
	Disc thickness	13mm(0.51in)	20mm(0.79in)
	Caliper piston	Single	4piston
	Cylinder I.D	Φ42.9mm(1.69in)	Φ(32mm+28mm(1.26in+1.10in))X2
Parking brake	Type	DIH (Drum in hat)	
	Drum I.D.	Ø 190mm (7.48in)	

NOTE

O.D. : Outer Diameter
I.D : Inner Diameter

Specification(ABS)

Part	Item	Standard value	Remark
HECU	System	4 Channel 4 Sensor (Solenoid)	
	Type	Motor, valve relay intergrated type	
	Operating Voltage	10 ~ 16 V	
	Operating Temperature	-40 ~ 120 °C (-40 ~ 248°F)	
	Motor power	210 W	
Warning lamp	Min. operating Voltage	12V	
	Max. Current consumption	Max. 200mA	
	Supply voltage	DC 4.5 ~ 20V	
	Output current low	5.9 ~ 8.4mA	

Active Wheel speed sensor (ABS)	Output current high	11.8~ 16.8mA	
	Output range	1 ~ 2500 Hz	
	Tone wheel	Front : 46 teeth Rear : 47 teeth	
	Air gap	0.5 ~ 1.5 mm	

Specification (ESC)

Part	Item	Standard value	Remark
HECU	System	4 Channel 4 Sensor (Solenoid)	Total control (ABS, EBD, TCS, ESC)
	Type	Motor, valve relay intergrated type	
	Operating Voltage	10 ~ 16V	
	Operating Temperature	-40 ~ 120°C(-40 ~ 248°F)	
	Motor power	270W	
Warning lamp	Min. Operating Voltage	12V	
	Max. Current consumption	Max. 200mA	
Active Wheel speed sensor	Supply voltage	DC 4.5 ~ 20V	
	Output current low	5.9 ~ 8.4mA	
	Output current high	11.8~ 16.8mA	
	Output range	1 ~ 2500Hz	
	Tone wheel	Front : 46 teeth Rear : 47 teeth	
	Air gap	0.5 ~ 1.5mm	
Steering Wheel Angle Sensor	Operating Voltage	8 ~ 16V	
	Current consumption	Max. 100mA	
	Output measurement range	-780 ~ +799.9°	
	Operating Angular velocity	1500°/sec	
Yaw rate& Lateral G sensor (CAN TYPE)	Operating Voltage	8 V ~ 17V	
	Current Consumption	Max. 140mA	
	Yaw rate sensor measurement range	-75 ~ 75°/sec	
	Lateral G sensor measurement range	-1.5 ~ 1.5gN	

Service Standard

Items	Standard vale
Brake pedal stroke	AT : 132.1mm (5.20in) MT : 132.9mm (5.23in)
Stop lamp clearance	1.0 ~ 1.5mm (0.04 ~ 0.06in)
Brake pedal free play	3 ~ 8 mm (0.12 ~ 0.13in)
Parking brake lever stroke when lever assembly is pulled with 196N (20Kg, 44lb force)	5 Notch

Front brake disc	disc thickness	General	28mm(1.10in)
		Brembo	28mm(1.10in)
	pad thickness	General	11mm(0.43in)
		Brembo	8.5mm(0.33in)
Rear brake disc	disc thickness	General	13mm(0.51in)
		Brembo	20mm(0.79in)
	pad thickness	General	9mm(0.35in)
		Brembo	9.1mm(0.36in)

Tightening Torques

Items		N.m	kgf.m	lb-ft
Master cylinder to brake booster		12.7 ~ 16.7	1.3 ~ 1.7	9.4 ~ 12.3
Brake booster mounting nuts		12.7 ~ 15.7	1.3 ~ 1.6	9.4 ~ 11.6
Air bleeding screw	General	6.9 ~ 12.7	0.7 ~ 1.3	5.1 ~ 9.4
	Brembo	16.7 ~ 19.6	1.7 ~ 2.0	12.3 ~ 14.5
Brake tube flare nuts		12.7 ~ 16.7	1.3 ~ 1.7	9.4 ~ 12.3
Front caliper guide rod bolts		21.6 ~ 31.4	2.2 ~ 3.2	15.9 ~ 23.1
Rear caliper guide rod bolts		21.6 ~ 31.4	2.2 ~ 3.2	15.9 ~ 23.1
Front caliper assembly to knuckle	General	78.5 ~ 98.1	8.0 ~ 10.0	57.9 ~ 72.3
	Brembo	88.3 ~ 103.0	9.0 ~ 10.5	65.1 ~ 75.9
Rear caliper assembly to knuckle		78.5 ~ 98.1	8.0 ~ 10.0	57.9 ~ 72.3
Brake hose to caliper		24.5 ~ 29.4	2.5 ~ 3.0	18.1 ~ 21.7
Brake pedal member bracket bolts		12.7 ~ 15.7	1.3 ~ 1.6	9.4 ~ 11.6
Brake pedal shaft nut		8.8 ~ 13.7	0.9 ~ 1.4	6.5 ~ 10.1
Stop lamp switch lock nut		7.8 ~ 9.8	0.8 ~ 1.0	5.8 ~ 7.2
Wheel speed sensor mounting bolt		6.9 ~ 10.8	0.7 ~ 1.1	5.1 ~ 8.0
HECU bracket mounting bolt		16.7 ~ 25.5	1.7 ~ 2.6	12.3 ~ 18.8
Yaw rate&G sensor mounting bolts		7.8 ~ 10.8	0.8 ~ 1.1	5.8 ~ 8.0

Lubricants

Items	Recommended	Quantity
Brake fluid	DOT 3 or DOT 4	As required
Brake pedal bushing and bolt	Chassis grease	As required
Parking brake shoe and backing plate contacting surface	Heat resistance grease	As required
Front caliper guide rod and boot	AI-11P	1.2 ~ 1.7g
Rear caliper guide rod and boot	AI-11P	0.8 ~ 1.3g

Special Service Tools

Tool (Number and Name)	Illustration	Use
09581-11000 Piston expander	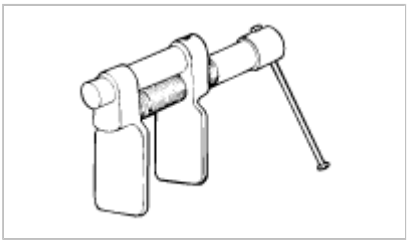	Spreading the front disc brake piston

Troubleshooting

Problem Symptoms Table

Use the table below to help you find the cause of theproblem. The numbers indicate the priority of the likecause of the problem. Check each part in order.
If necessary, replace these parts.

Symptom	Suspect Area	Reference
Lower pedal or spongy pedal	1. Brake system (Fluid leaks) 2. Brake system (Air in) 3. Piston seals (Worn or damaged) 4. Rear brake shoe clearance(Out of adjustment) 5. Master cylinder (Inoperative)	repair air·bleed replace adjust replace
Brake drag	1. Brake pedal free play (Minimum) 2. Parking brake lever travel (Out of adjustment) 3. Parking brake wire (Sticking) 4. Rear brake shoe clearance(Out of adjustment) 5. Pad or lining (Cracked or distorted) 6. Piston (Stuck) 7. Piston (Frozen) 8. Anchor or Return spring (Inoperative) 9. Booster system (Vacuum leaks) 10. Master cylinder (Inoperative)	adjust adjust repair adjust replace replace replace replace repair replace
Brake pull	1. Piston (Sticking) 2. Pad or lining (Oily) 3. Piston (Frozen) 4. Disc (Scored) 5. Pad or lining (Cracked or distorted)	replace replace replace replace replace
Hard pedal but brake inefficient	1. Brake system (Fluid leaks) 2. Brake system (Air in) 3. Pad or lining (Worn) 4. Pad or lining (Cracked or distorted) 5. Rear brake shoe clearance(Out of adjustment) 6. Pad or lining (Oily) 7. Pad or lining (Glazed) 8. Disc (Scored) 9. Booster system (Vacuum leaks)	repair air·bleed replace replace adjust adjust replace replace repair
Noise from brake	1. Pad or lining (Cracked or distorted) 2. Installation bolt (Loosen) 3. Disc (Scored) 4. Sliding pin (Worn) 5. Pad or lining (Dirty) 6. Pad or lining (Glazed) 7. Anchor or Return spring (Faulty) 8. Brake pad shim (Damage) 9. Shoe hold-down spring (Damage)	replace adjust replace replace clean replace replace replace replace
Brake fades	1. master cylinder	replace
Brake vibration, pulsation	1. brake booster 2. pedal free play 3. master cylinder 4. caliper	replace adjust replace replace

	5. master cylinder cap seal 6. damaged brake lines	replace replace
Brake Chatter	Brake chatter is usually caused by loose or worn components, or glazed or burnt linings. Rotors with hard spots can also contribute to brake chatter. Additional causes of chatter are out-of-tolerance rotors, brake lining not securely attached to the shoes, loose wheel bearings and contaminated brake lining.	

Operation and Leakage Check

Check all of the following items

Component	Procedure
Brake Booster (A)	Check brake operation by applying the brakes during a test drive. If the brakes do not work properly, check the brake booster. Replace the brake booster as an assembly if it does not work properly or if there are signs of leakage.
Piston cup and pressure cup inspection (B)	• Check brake operation by applying the brakes. Look for damage or signs of fluid leakage. Replace the master cylinder as an assembly if the pedal does not work properly or if there is damage or signs of fluid leakage. • Check for a difference in brake pedal stroke between quick and slow brake applications. Replace the master cylinder if there is a difference in pedal stroke.
Brake hoses (C)	Look for damage or signs of fluid leakage. Replace the brake hose with a new one if it is damaged or leaking.
Caliper piston seal and piston boots (D)	Check brake operation by applying the brakes. Look for damage or signs of fluid leakage. If the pedal does not work properly, the brakes drag, or there is damage or signs of fluid leakage, disassemble and inspect the brake caliper. Replace the boots and seals with new ones whenever the brake caliper is disassembled.

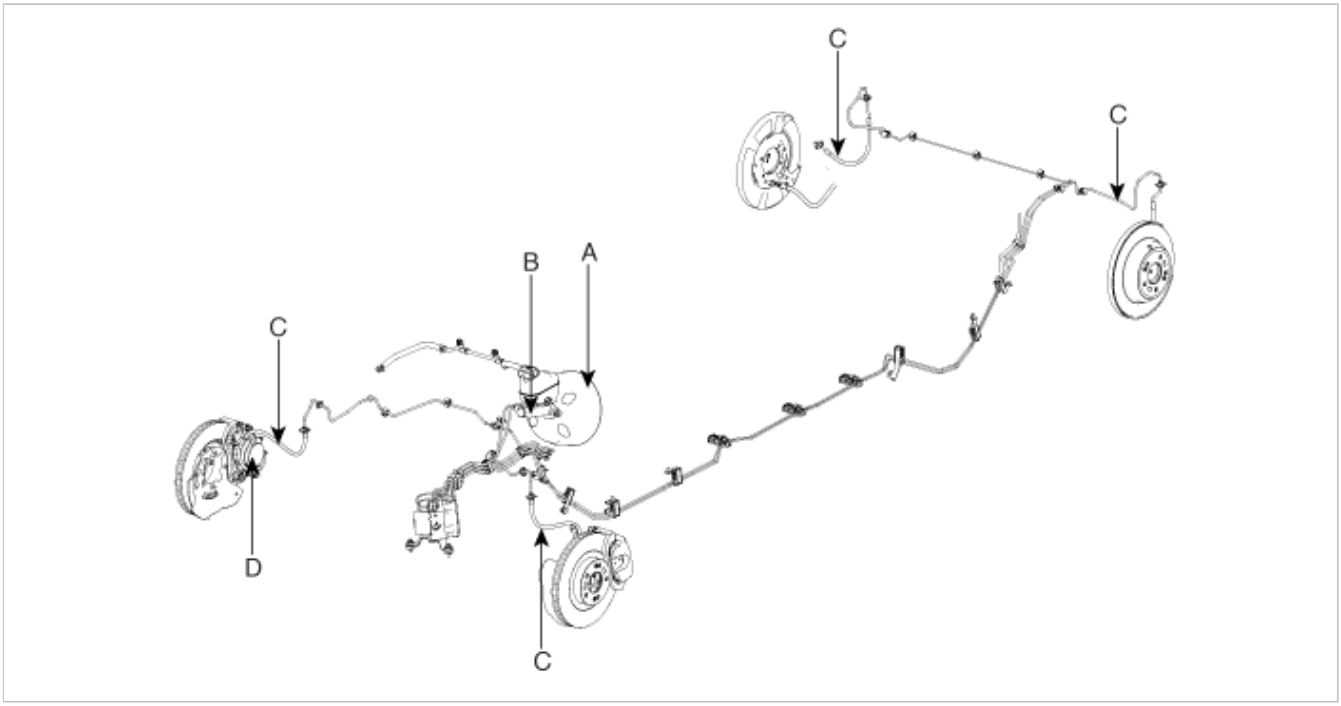

Brake System Bleeding

CAUTION

- Do not reuse the drained fluid.
- Always use genuine DOT3/DOT4 brake Fluid.
  Using a non-genuine DOT3/DOT4 brake fluid can cause corrosion and decrease the life of the system.
- Make sure no dirt or other foreign matter is allowed to contaminate the brake fluid.
- Do not spill brake fluid on the vehicle, it may damage the paint; if brake fluid does contact the paint, wash it off immediately with water.
- The reservoir on the master cylinder must be at the MAX (upper) level mark at the start of bleeding procedure and checked after bleeding each brake caliper. Add fluid as required.

1. Make sure the brake fluid in the reservoir is at the MAX(upper) level line.
2. Have someone slowly pump the brake pedal several times, and then apply pressure.
3. Loosen the right-rear brake bleed screw (A) to allow air to escape from the system. Then tighten the bleed screw securely.

Front

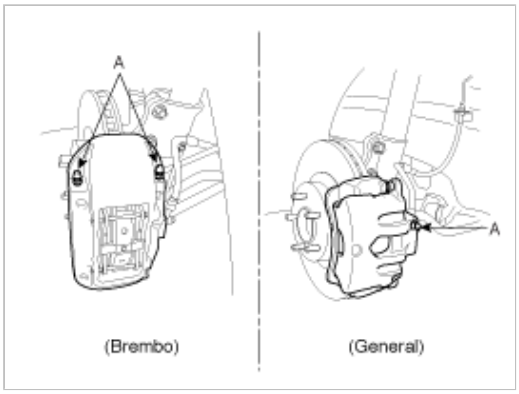

Rear

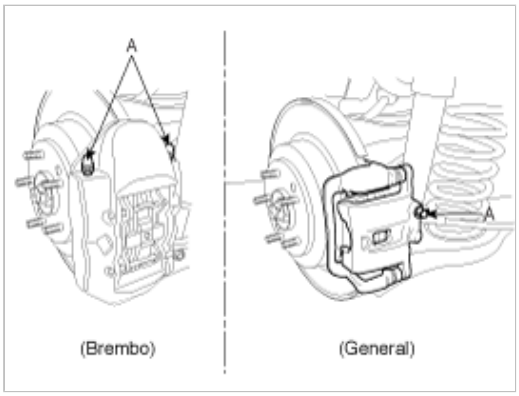

4. Repeat the procedure for wheel in the sequence shown below until air bubbles no longer appear in the fluid.

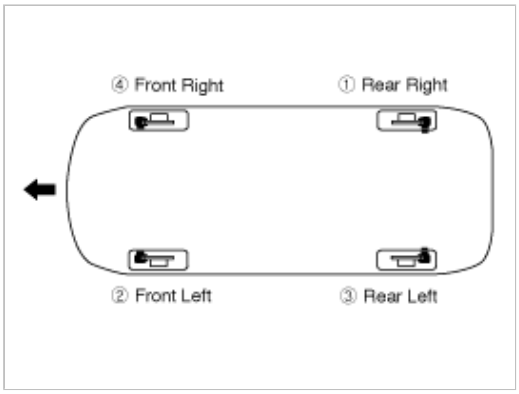

5. Refill the master cylinder reservoir to MAX(upper) level line.

Components

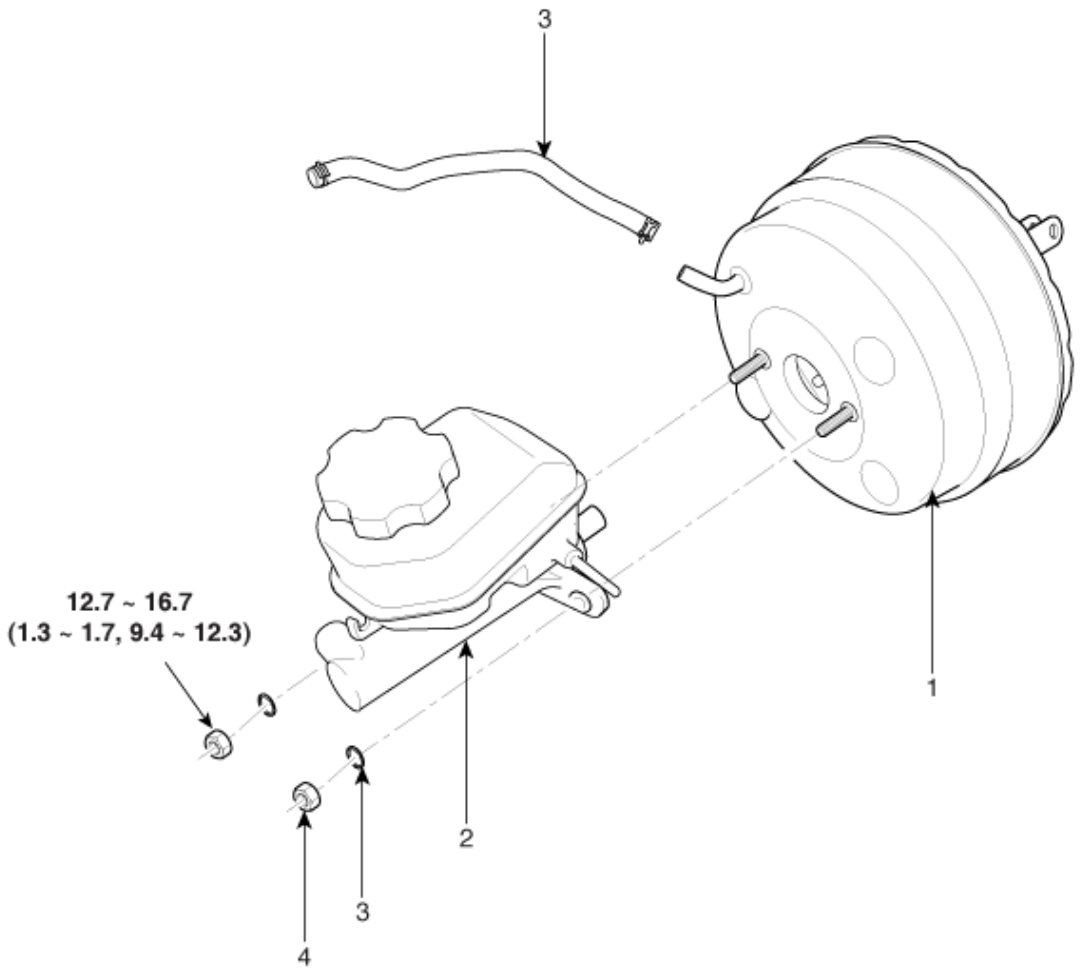

Torque : N.m (kgf.m, lb-ft)

1. Brake booster 2. Master cylinder assembly 3. Washer	4. Nut 5. Vacuum hose

Brake Booster Operating Test

For simple checking of the brake booster operation, carry out the following tests.

1. Run the engine for one or two minutes, and then stop it. If the pedal depresses fully the first time but gradually becomes higher when depressed succeeding times, the booster is operating properly, if the pedal height remains unchanged, the booster is inoperative.

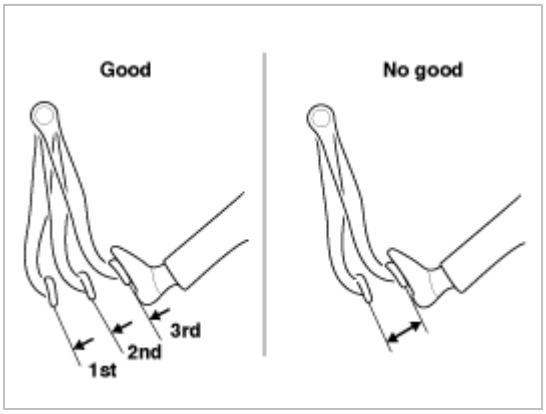

2. With the engine stopped, step on the brake pedal several times.
   Then step on the brake pedal and start the engine. If the pedal moves downward slightly, the booster is in good condition. If there is no change, the booster is inoperative.

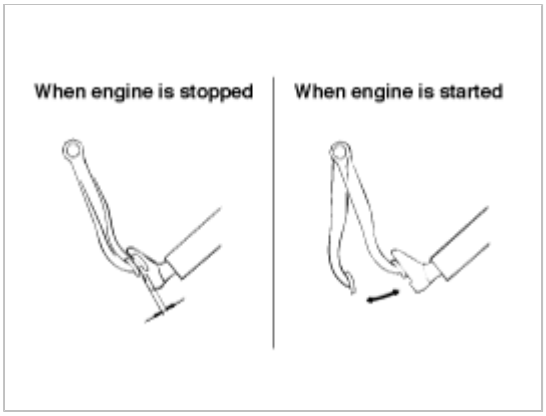

3. With the engine running, step on the brake pedal and then stop the engine.
   Hold the pedal depressed for 30 seconds. If the pedal height does not change, the booster is in good condition, if the pedal rises, the booster is inoperative.
   If the above three tests are okay, the booster performance can be determined as good.
   Even if one of the above three tests is not okay, check the check valve, vacuum hose and booster for malfunction.

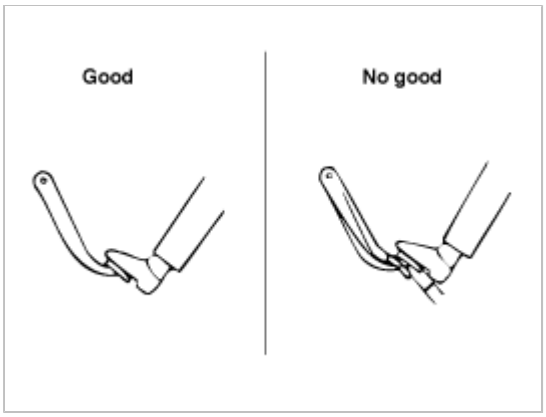

Removal

1. Turn ignition switch OFF and disconnect the negative (-) battery cable.
2. Remove the strut bar (A).

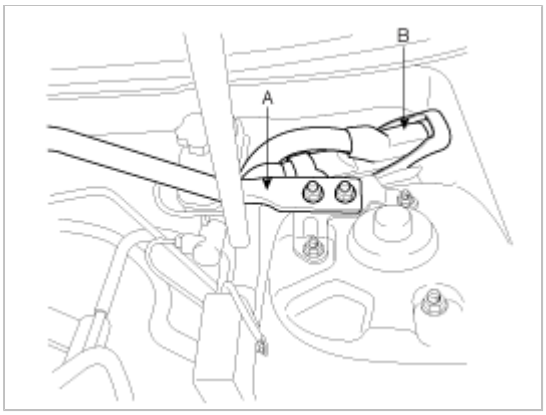

3. Disconnect the ECM connector (B). And then take the protector of control harness off.
4. Disconnect the vacuum hose (A) from the brake booster.

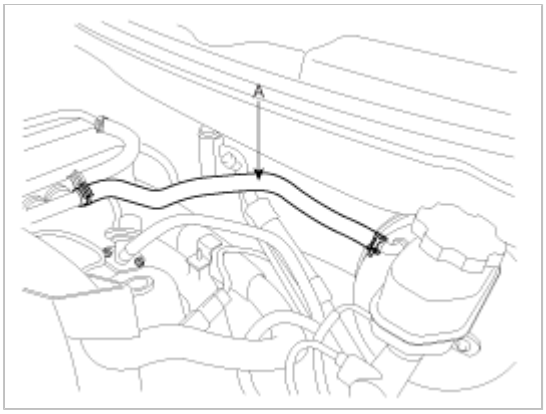

5. Remove the master cylinder. (Refer to Master cylinder)
6. Remove the snap pin (A) and clevis pin (B).

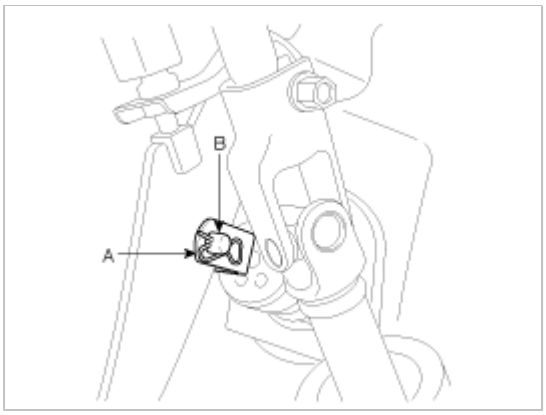

7. Remove the mounting nuts.

Tightening torque :
12.7 ~ 15.7N.m (1.3 ~ 1.6kgf.m, 9.4 ~ 11.6lb-ft)

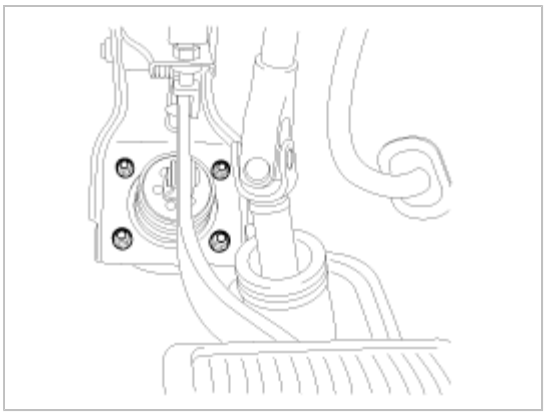

8. Remove the brake booster.

Inspection

1. Inspect the check valve in the vacuum hose.

> **CAUTION**
>
> Do not remove the check valve from the vacuum hose.

2. Check the boot for damage.

Installation

1. Installation is the reverse of removal.

> **CAUTION**
>
> - Before installing the pin, apply the grease to the joint pin.
> - Use a new snap pin whenever installing.

2. After installing, bleed the brake system. (Refer to Brake system bleeding)
3. Adjust the brake pedal height and free play.
   (Refer to Brake pedal height and free play adjustment)

Description

The Vacuum Pump System is set up in a vehicle in order to make the vacuum enough when a driver presses the brake pedal on the high ground. To operate this system, the vacuum pump is installed on a vehicle.
If the vacuum is not sufficient to press the brake pedal, the HECU senses it through the vacuum switch, which is installed on booster. And then the HECU supplies the power to the vacuum pump by grounding the circuit of the vacuum pump relay. When the vacuum pump is supplied with electric power, it makes the vacuum and supplements it to the booster.

Components

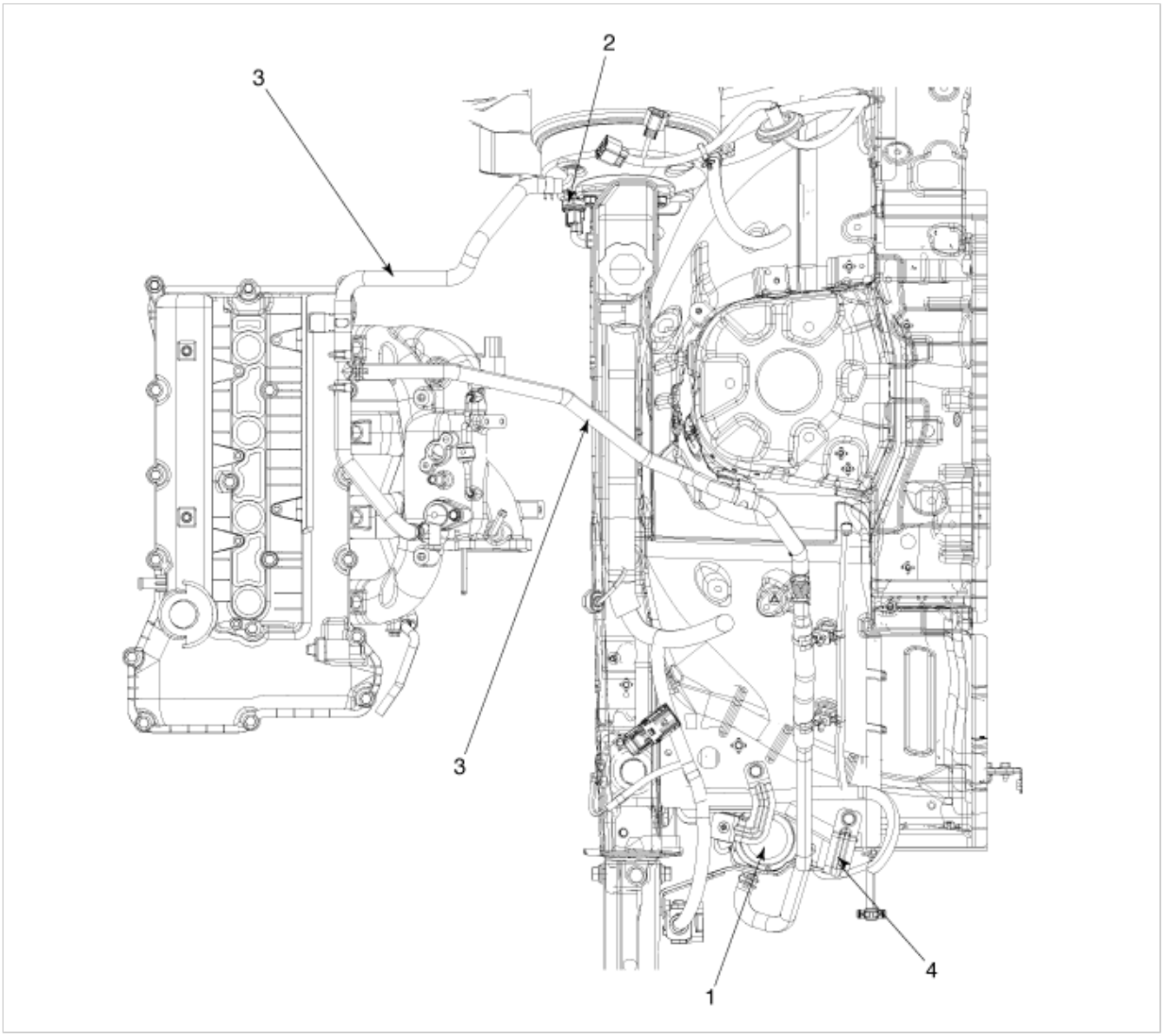

1. Vacuum pump	3. Vacuum hose
2. Vacuum switch	4. Vacuum pump bracket

GENESIS COUPE(BK) >2010 > G 2.0 DOHC > Brake System > Brake System > Vacuum Pump (2.0 A/T & ESC Only) > Repair procedures

Removal

1. Remove the front bumper cover. (Refer to the Body group – bumper)
2. Disconnect the Vacuum pump connector (A).

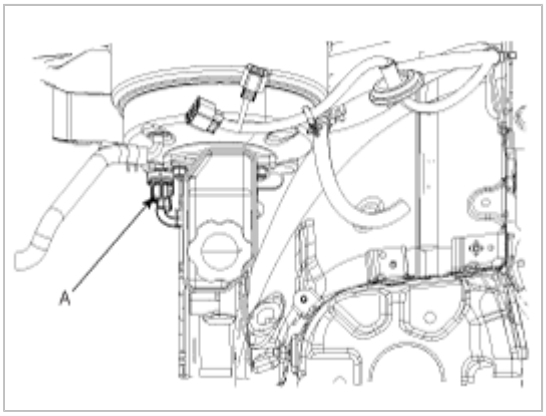

3. Remove the Vacuum hose (A).

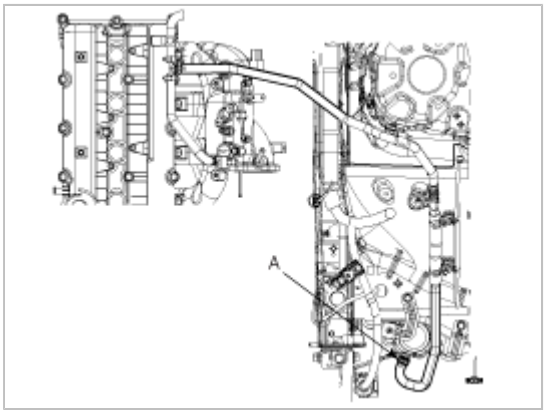

4. Remove the mounting bracket bolt A).

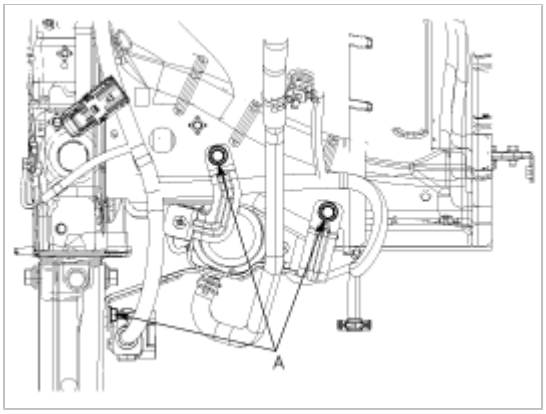

5. Remove the 2 nuts (A) and then remove the bracket from Vacuum pump.

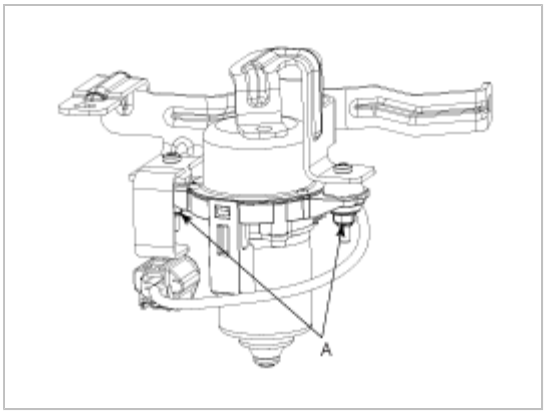

Installation

1. Install the Vacuum pump to the bracket.

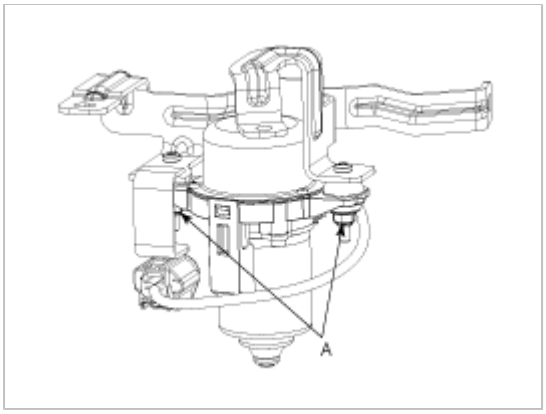

2. Install the Vacuum pump & bracket bolt.

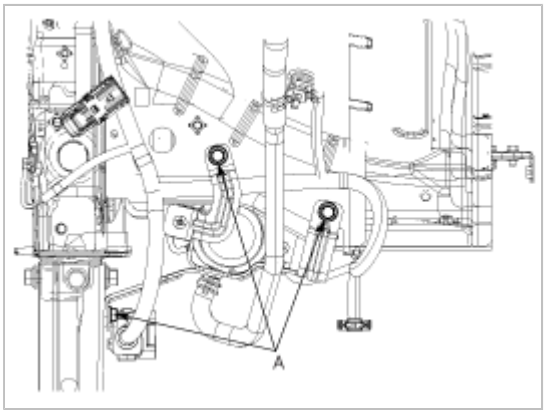

3. Install the Vacuum hose.

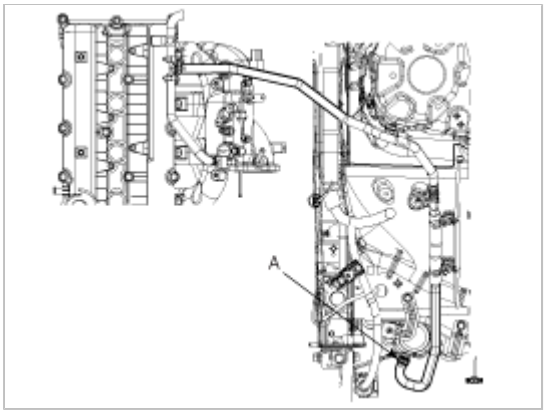

4. Connect the Vacuum pump connector.

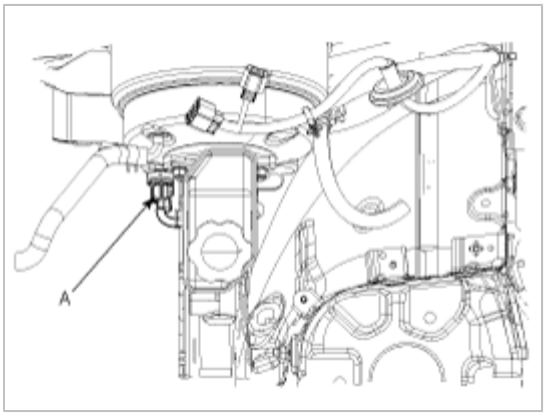

5. Install the front bumper cover. (Refer to the Body group – bumper)

Components

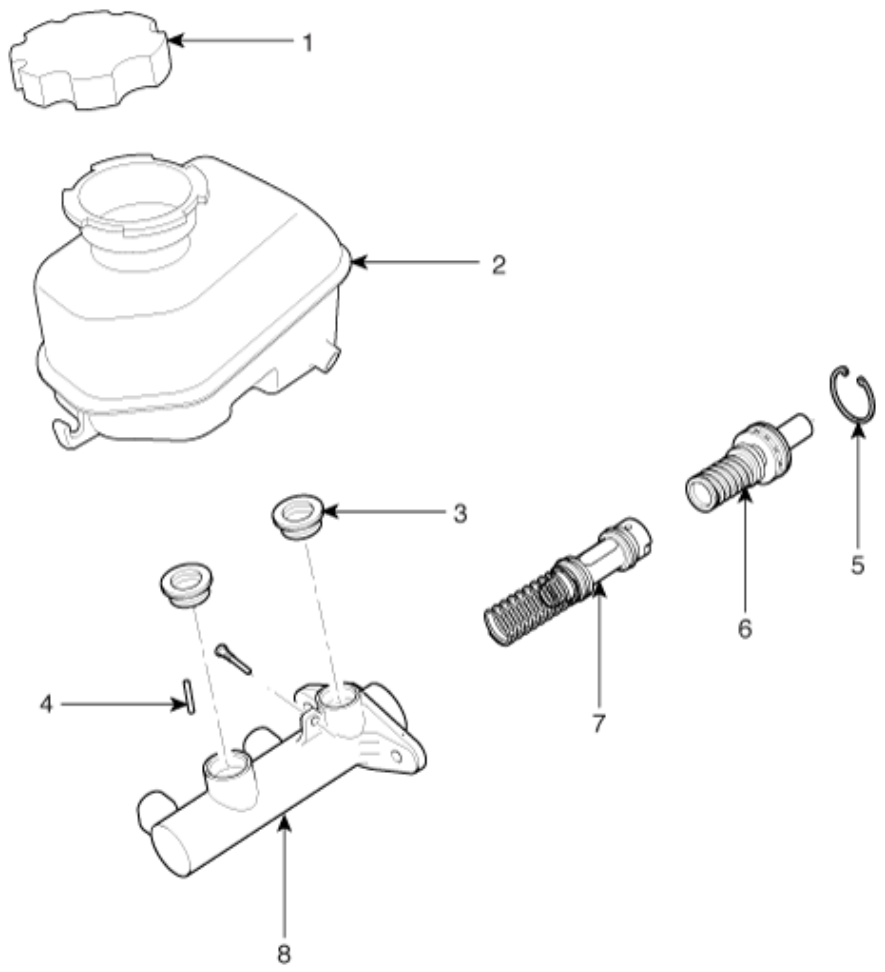

1. Reservoir cap	5. Retainer
2. Reservoir	6. Primary piston assembly
3. Grommet	7. Secondary piston assembly
4. Cylinder pin	8. Master cylinder body

Removal

1. Turn ignition switch OFF and disconnect the negative (-) battery cable.
2. Remove the strut bar (A).

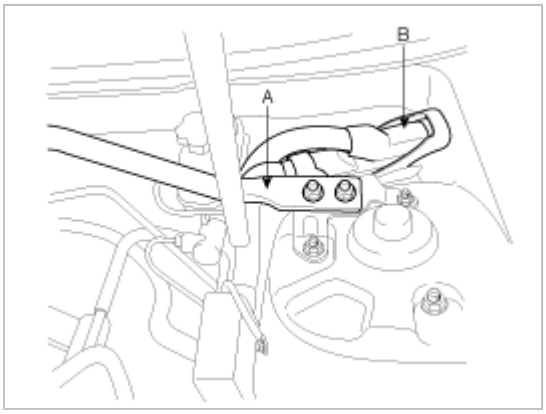

3. Disconnect the ECM connector (B). And then take the protector of control harness off.
4. Disconnect the brake fluid level switch connector (A) from the reservoir.

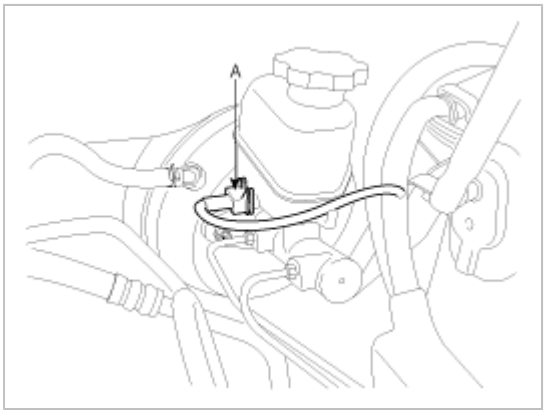

5. Remove the brake fluid from the master cylinder reservoir with a syringe.

> **CAUTION**
>
> - Do not spill brake fluid on the vehicle, it may damage the paint; if brake fluid does contact the paint, wash it off immediately with water.

6. Disconnect the brake tube (B) from the master cylinder by loosening the tube flare nut.

Tightening torque :
ABS : 12.7 ~ 16.7 (1.3 ~ 1.7kgf.m, 9.4 ~ 12.3lb-ft)
ESC : 18.6 ~ 22.6N.m (1.9 ~ 2.3kgf.m , 13.7 ~ 16.7lb-ft)

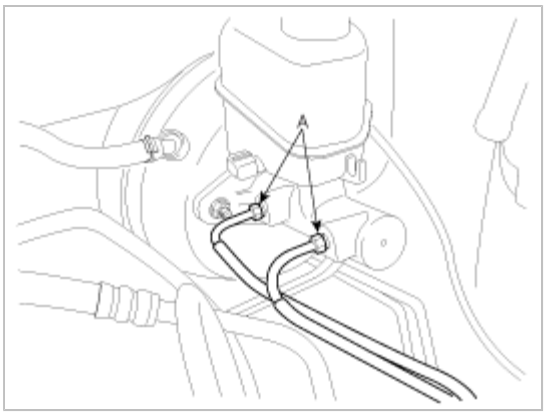

7. Remove the master cylinder (B) from the brake booster after loosening the mounting nuts (C).

Tightening torque :
12.7 ~ 16.7N.m (1.3 ~ 1.7 kgf.m, 9.4 ~ 12.3lb-ft)

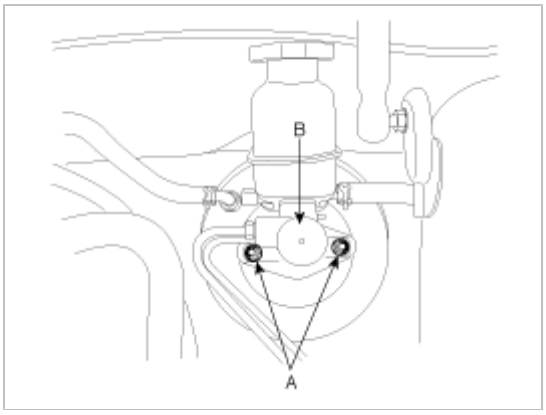

Disassembly

1. Remove the reservoir cap and drain the brake fluid into a suitable container.
2. Remove the reservoir (C) from the master cylinder (B), after remove mounting screw (A).

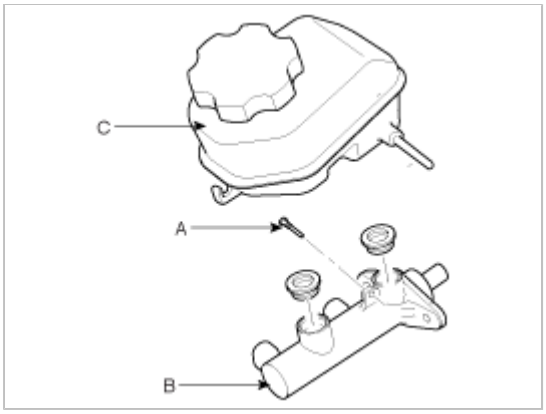

3. Remove the retainer ring (A) by using the snap ring pliers.
4. Remove the primary piston assembly (B).
5. Remove the pin (D) with the secondary piston(C) pushed completely using a screwdriver. Remove the secondary piston assembly (C).

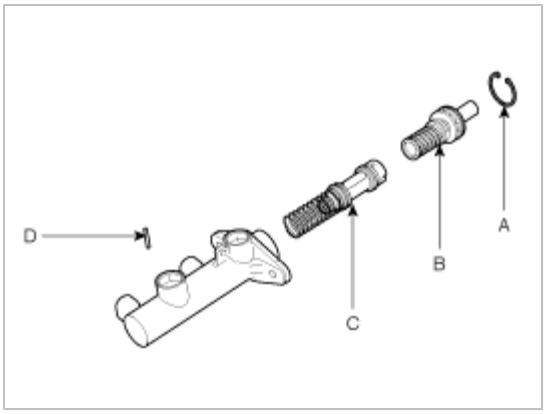

NOTE

Do not disassemble the primary and secondary piston assembly.

Inspection

1. Check the master cylinder bore for rust or scratching.
2. Check the master cylinder for wear or damage. If necessary, clean or replace the cylinder.

CAUTION

- If the cylinder bore is damaged, replace the master cylinder assembly.
- Wash the contaminated parts in alcohol.

Reassembly

1. Apply genuine brake fluid to the rubber parts of the cylinder kit and grommets.
2. Carefully insert the springs and pistons in the proper direction.
3. Press the secondary piston (C) with a screwdriver and install the cylinder pin (D).

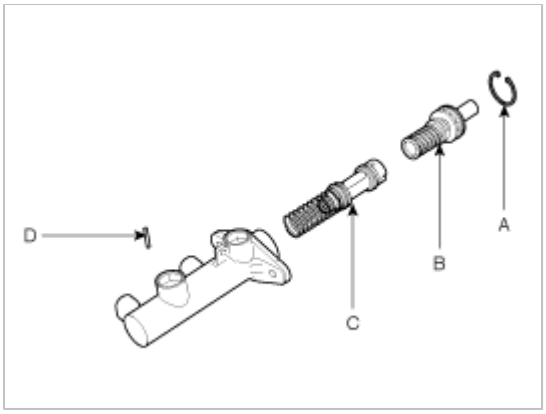

4. Install the retainer ring (A) after installing primary piston assembly (B).
5. Mount two grommets.
6. Install the reservoir (C) on the cylinder (B), and then install the mounting screw (A).

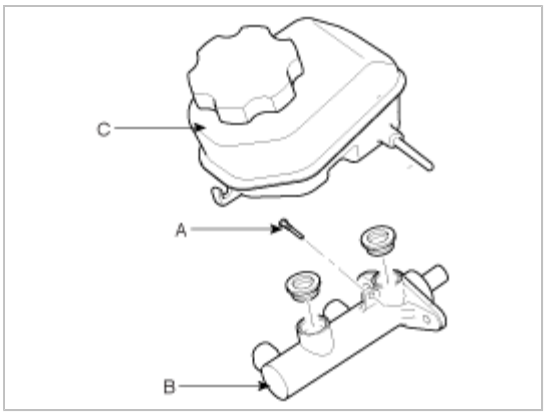

Installation

1. Installation is the reverse of removal.
2. After installation, bleed the brake system. (Refer to Brake system bleeding)

Components

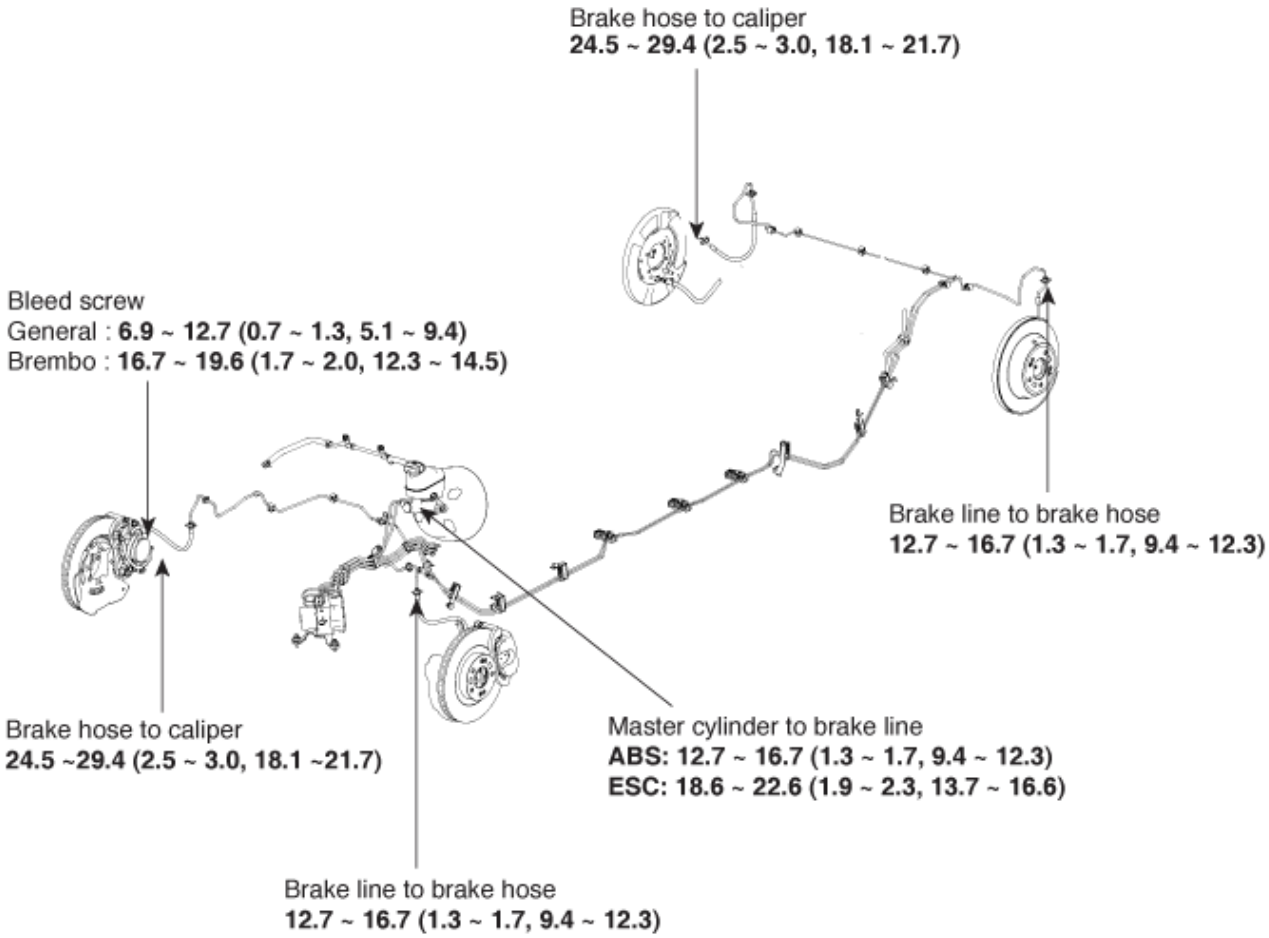

Torque : Nm (kgf.m, lb-ft)

WARNING

When installing brake hose, be sure to comply with the torqe specification to prevent twisted hose.

Removal

1. Remove the wheel & tire.
2. Remove the brake hose clip (A).

Front

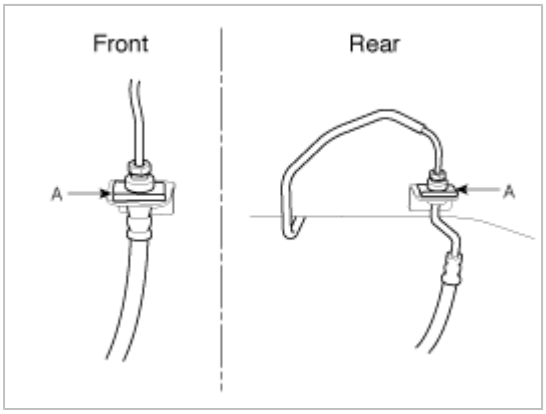

3. Disconnect the brake tube by loosening the tube flare nut.

Tightening torque :
12.7 ~ 16.7N.m (1.3 ~ 1.7kgf.m, 9.4 ~ 12.3lb-ft)

4. Disconnect the brake hose from the brake caliper by loosening the bolt.

Tightening torque :
24.5 ~ 29.4N.m (2.5 ~ 3.0kgf.m, 18.1 ~ 21.7lb-ft)

Front

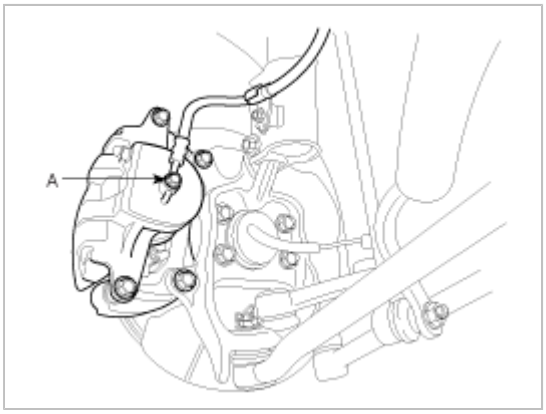

Rear

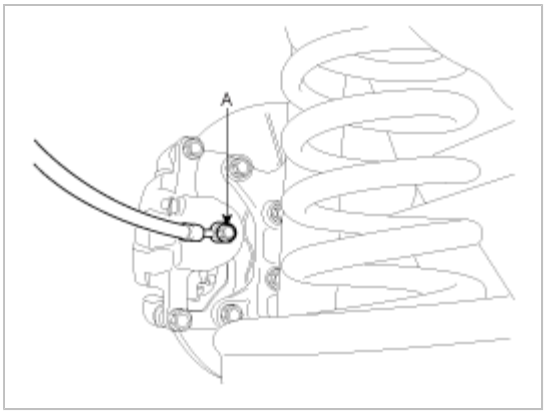

Inspection

1. Check the brake tubes for cracks, crimps and corrosion.
2. Check the brake hoses for cracks, damage and fluid leakage.
3. Check the brake tube flare nuts for damage and fluid leakage.
4. Check the brake hose mounting bracket for crack or deformation.

Installation

1. Installation is the reverse of removal.

> **CAUTION**
>
> Use a new washer (A) whenever installing.

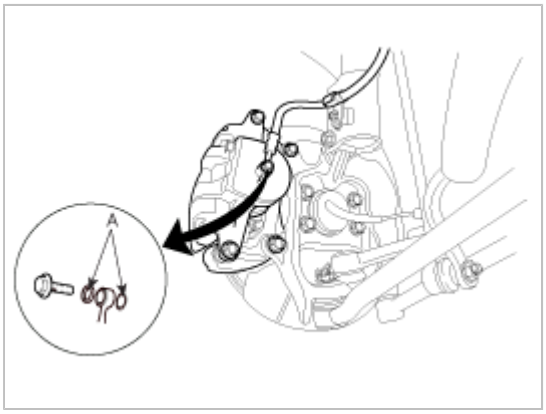

2. After installation, bleed the brake system. (Refer to Brake system bleeding)
3. Check the spilled brake oil.

Components

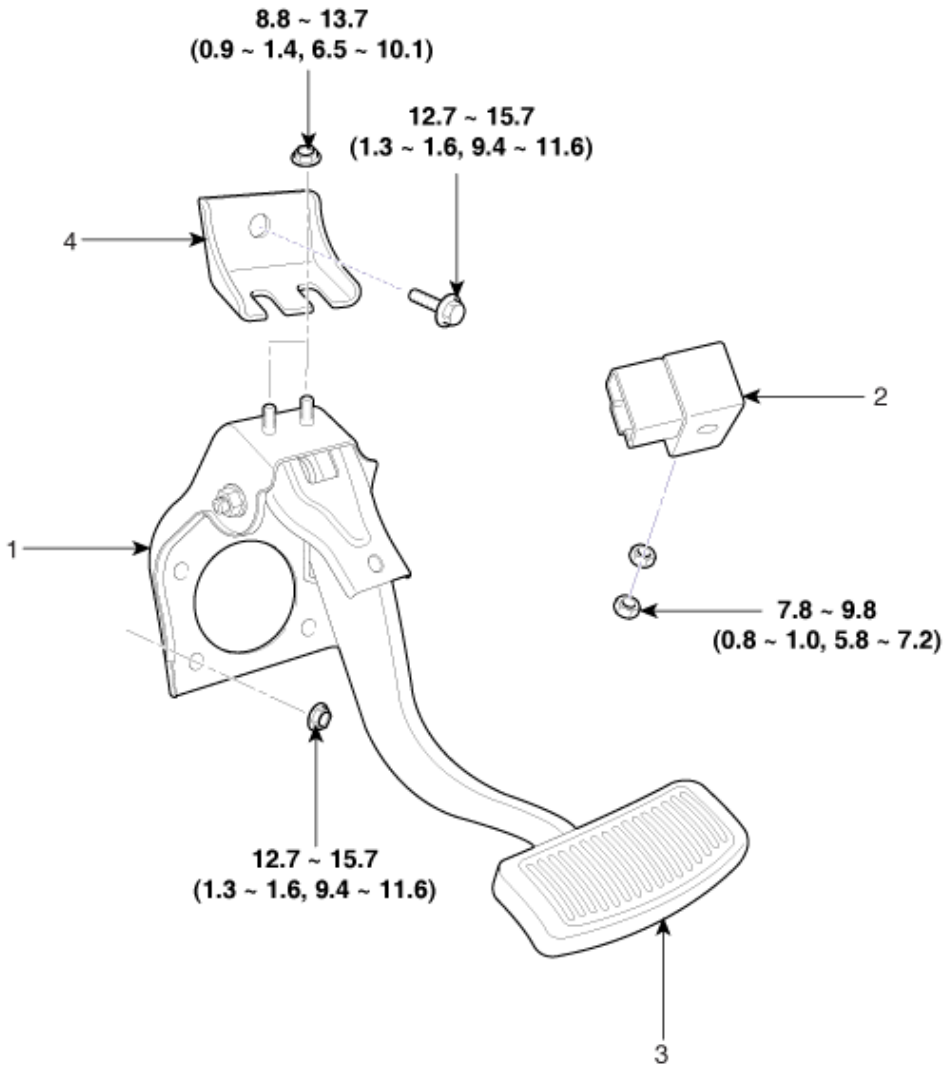

Torque : N.m (kgf.m, lb-ft)

1. Brake pedal member assembly 2. Stop lamp switch	3. Brake pedal 4. Brake bracket

Removal

1. Remove the lower crash pad. (Refer to the Body group- crash pad).
2. Disconnect the stop lamp switch connector (A).

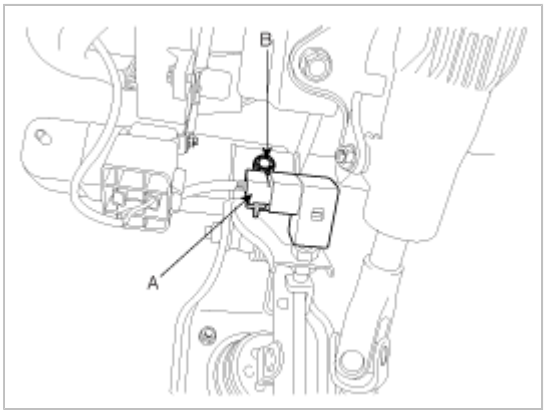

3. Remove the mounting bracket bolt (B).

Tightening torque :
12.7 ~ 15.7N.m (1.3 ~ 1.6kgf.m, 9.4 ~ 11.6lb-ft)

4. Remove the snap pin (A) and clevis pin (B).

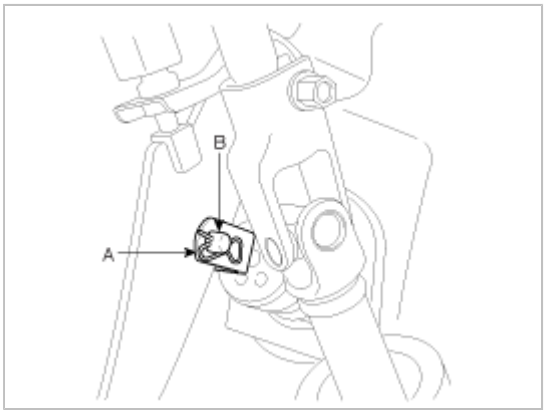

5. Remove the brake pedal member assembly mounting nuts and then remove the brake pedal assembly.

Tightening torque :
12.7 ~ 15.7N.m (1.3 ~ 1.6kgf.m, 9.4 ~ 11.6lb-ft)

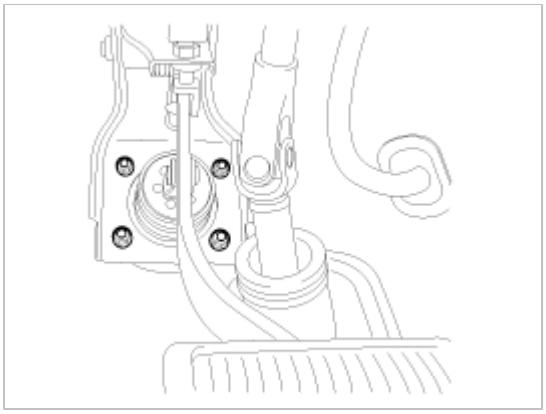

Inspection

1. Check the bushing for wear.
2. Check the brake pedal for bending or twisting.
3. Check the brake pedal return spring for damage.
4. Check the stop lamp switch.
   (1) Connect a circuit tester to the connector of stop lamp switch, and check whether or not there is continuity when the plunger of the stop lamp switch is pushed in and when it is released.
   (2) The stop lamp switch is in good condition if there is no continuity when plunger(A) is pushed.

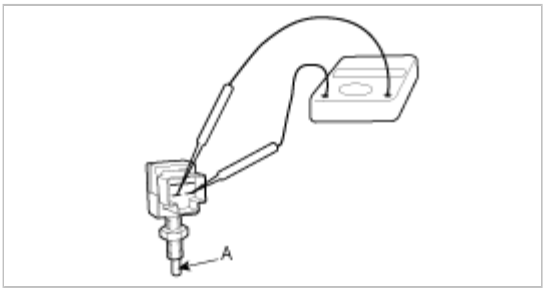

Installation

1. Installation is the reverse of removal.

> **CAUTION**
>
> • Before installing the pin, apply the grease to the clevis pin.
> • Use a new snap pin whenever installing.

2. Check the brake pedal operation.

Components (1)

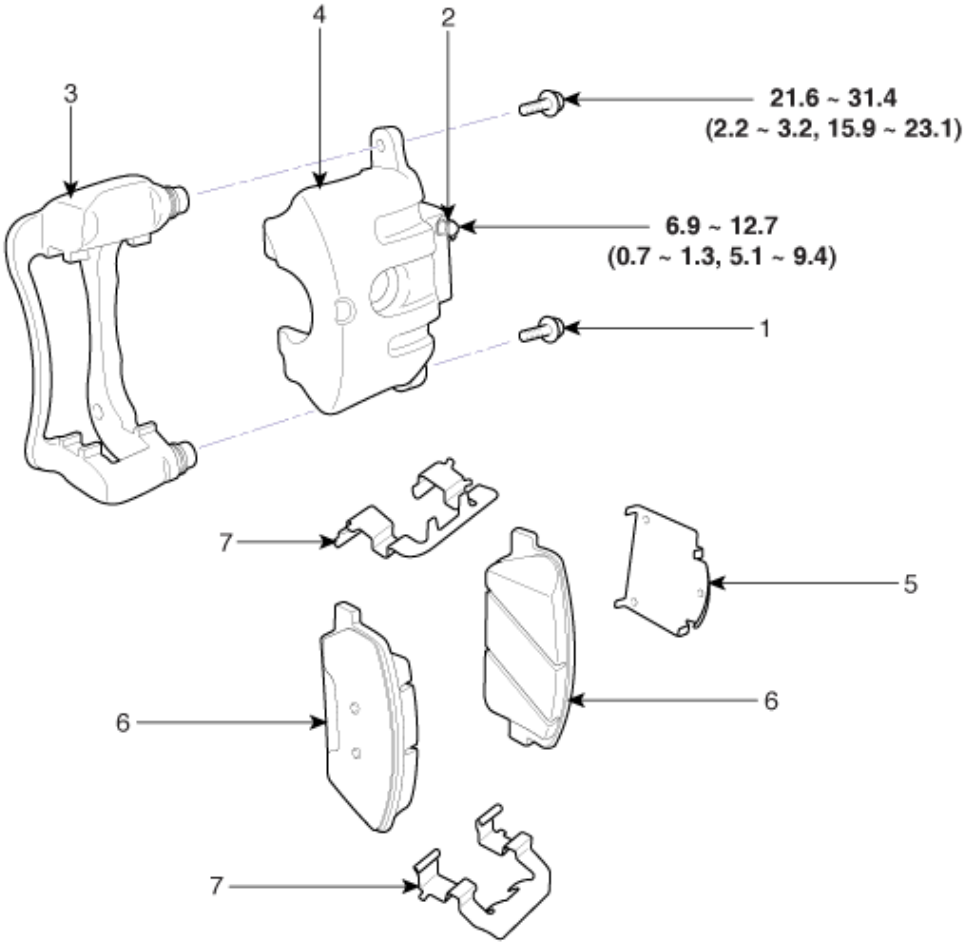

Torque : N.m (kgf.m, lb-ft)

1. Guide rod bolt 2. Bleed screw 3. Caliper bracket 4. Caliper body	5. Inner pad shim 6. Brake pad 7. Pad retainer

Components (2)

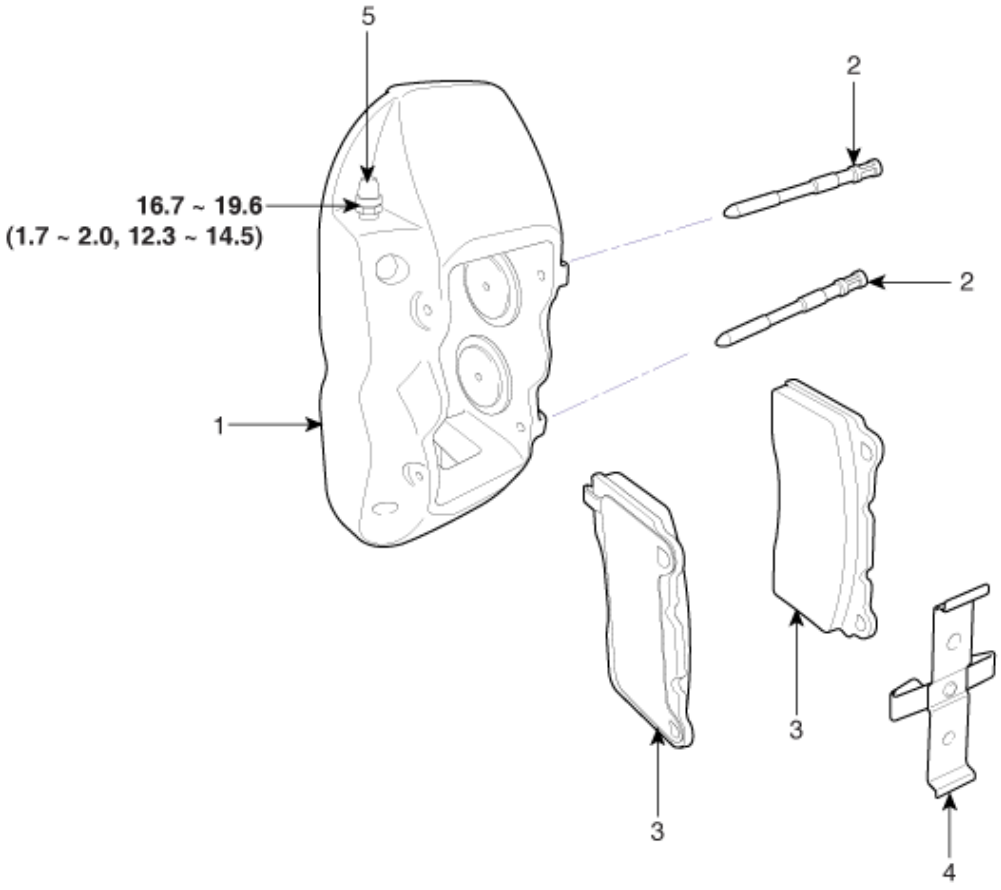

Torque : N.m (kgf.m, lb-ft)

1. Caliper body 2. Guide pin 3. Brake pad	4. Retraction spring 5. Bleed screw

Removal

General caliper type

1. Remove the front wheel & tire.

Tightening torque :
88.3 ~ 107.9N.m (9.0 ~ 11.0kgf.m, 65.1 ~ 79.6lb-ft)

2. Loosen the hose eye-bolt (B) and caliper mounting bolts (C), then remove the front caliper assembly (A).

Tightening torque
Brake hose to caliper (B):
24.5 ~ 29.4N.m (2.5 ~ 3.0kgf.m, 18.1 ~ 21.7lb-ft)
Caliper assembly to knuckle (C):
78.5 ~ 98.1N.m (8.0 ~ 10.0kgf.m, 57.9 ~ 72.3lb-ft)

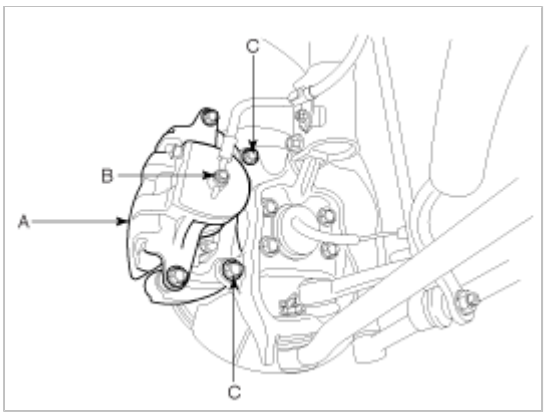

3. Remove the front brake disc by loosening the screws.

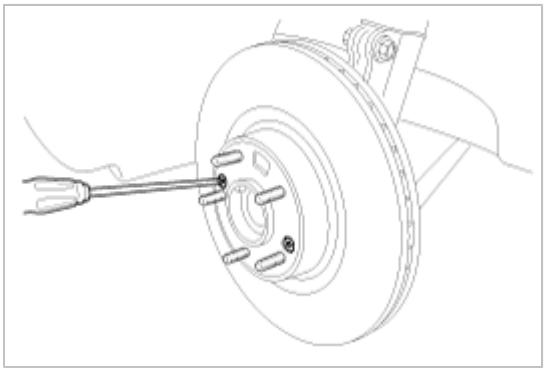

Bremb caliper type

1. Remove the front wheel & tire.

Tightening torque :
88.3 ~ 107.9N.m (9.0 ~ 11.0kgf.m, 65.1 ~ 79.6lb-ft)

2. Loosen the hose eye-bolt (B) and caliper mounting bolts (C), then remove the front caliper assembly (A).

Tightening torque
Brake hose to caliper (B):
24.5 ~ 29.4N.m (2.5 ~ 3.0kgf.m, 18.1 ~ 21.7lb-ft)

Caliper assembly to knuckle (C):
88.3 ~ 103.0N.m (9.0 ~ 10.5kgf.m, 65.1 ~ 75.9lb-ft)

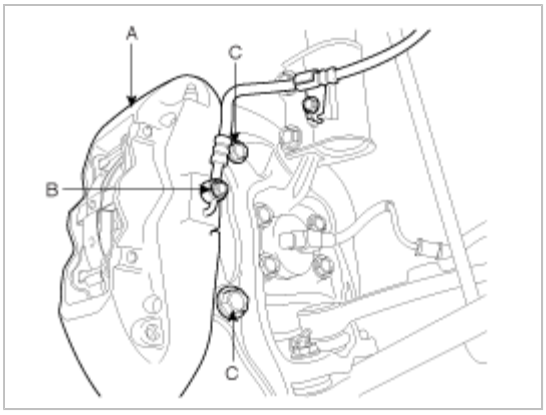

3. Remove the front brake disc by loosening the screws.

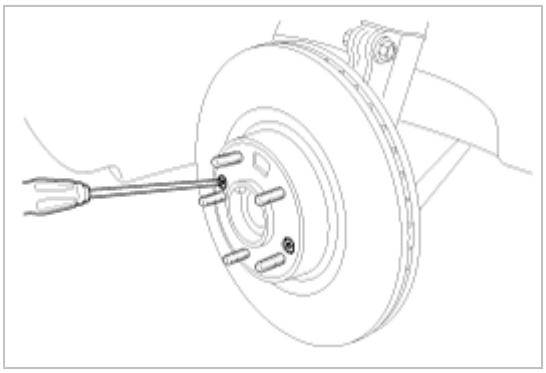

Replacement

Font Brake Pads (General caliper type)

1. Remove the brake hose mounting bracket (knuckle mounting part : D).

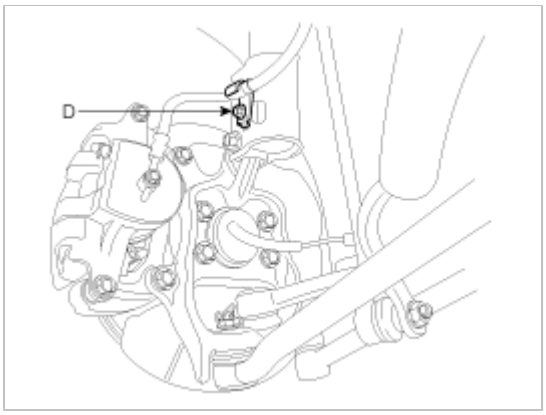

2. Loosen the guide rod bolt (B) and remove the caliper body (A).

Tightening torque :
21.6 ~ 31.4N.m (2.2 ~ 3.2kgf.m, 15.9 ~ 23.1lb-ft)

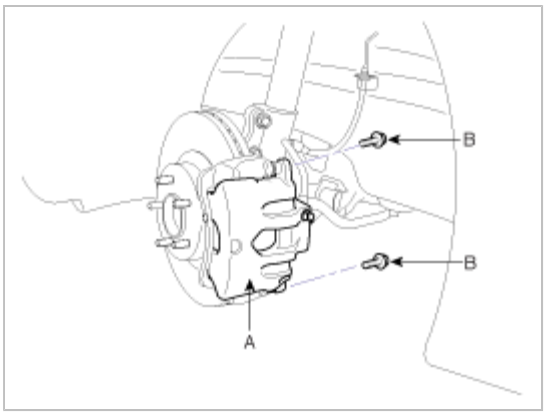

3. Replace pad shim (B), pad retainers (C) and brake pads (B) in the caliper bracket (A).

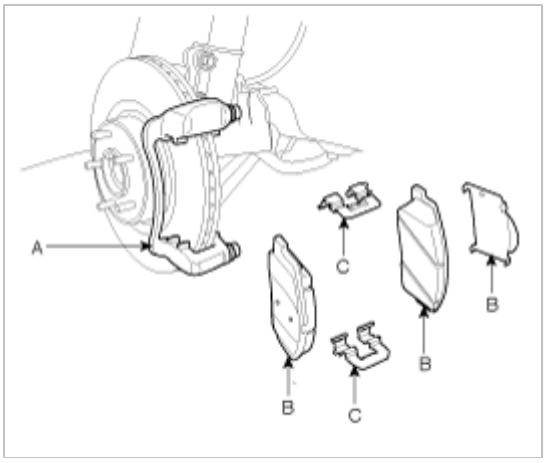

Font Brake Pads (B remb caliper type)

1. Remove the guide pin (B) of the lower part with the pin punch (A).

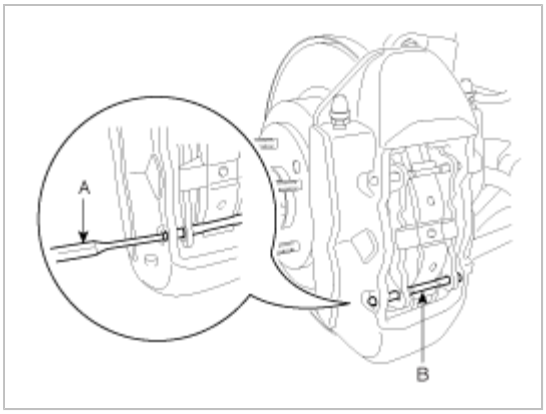

2. Remove the guide pin (C) of the upper part and retraction spring (D).

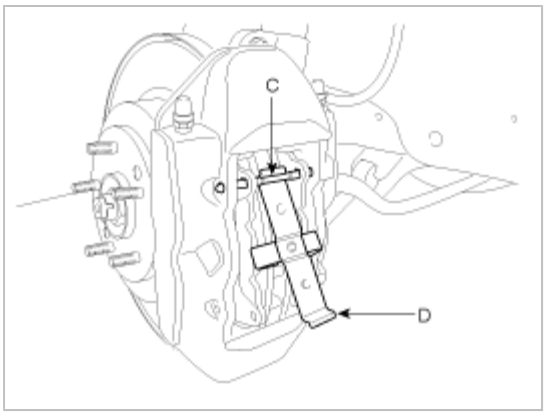

3. Replace brake pads (E) at the caliper body.

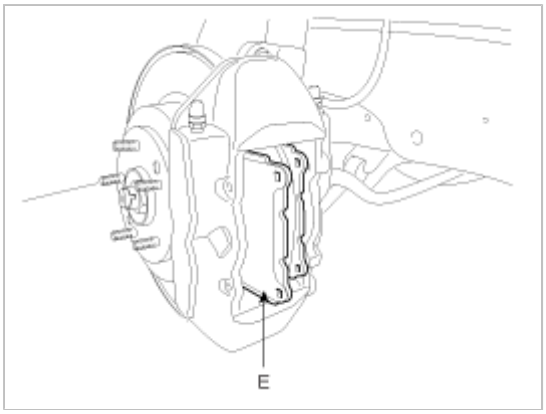

Inspection

Font Brake Disc Thickness Check

1. Check the brake pads for wear and fade.
2. Check the brake disc for damage and cracks.
3. Remove all rust and contamination from the surface, and measure the disc thickness at 8 points, at least, of same distance (5mm) from the brake disc outer circle.

Brake disc thickness
General caliper type
Standard: 28mm (1.10in)
Service limit: 26.4mm (1.04in)
Deviation: Less than 0.005mm (0.0002in) - circumference
Less than 0.01mm (0.0004in) - radius
Brembo caliper type
Standard: 28mm (1.10in)
Service limit: 26mm (1.02in)
Deviation: Less than 0.01mm (0.0004in) - circumference
Less than 0.04mm (0.0016in) - radius

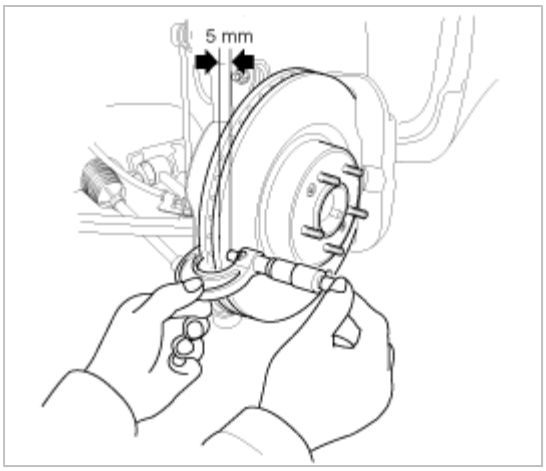

4. If wear exceeds the limit, replace the discs and pad assembly left and right of the vehicle.

Font Brake Pad Check

1. Check the pad wear. Measure the pad thickness and replace it, if it is less than the specified value.

Pad thickness
General caliper type
Standard value : 11mm (0.43in)
Service limit : 2.0mm (0.0787in)
Brembo caliper type
Standard value : 8.5mm (0.33in)
Service limit : 2.0mm (0.0787in)

2. Check that grease is applied, to sliding contact points and the pad and backing metal for damage.

Font Brake Disc Runout Check

1. Place a dial gauge about 5mm (0.2 in.) from the outer circumference of the brake disc, and measure the runout of the disc.

Brake disc runout
Limit : 0.035mm (0.00137in.) or less (new one)

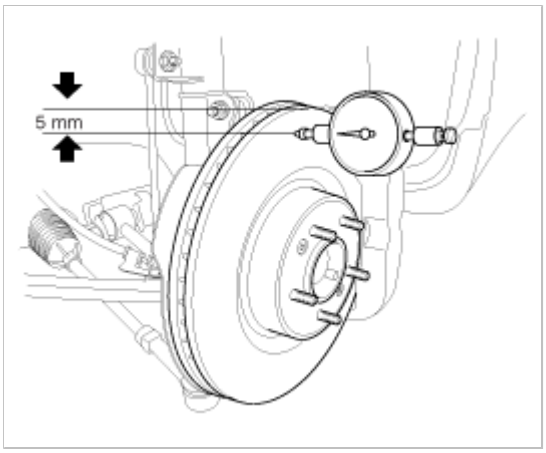

2. If the run out of the brake disc exceeds the limit specification, replace the disc, and then measure the run out again.
3. If the run out does not exceed the limit specification, install the brake disc after turning it and then check the run out of the brake disc again.
4. If the run out cannot be corrected by changing the position of the brake disc, replace the brake disc.

Installation

1. Installation is the reverse of removal.
2. Use a SST (09581-11000) when installing the brake caliper assembly.
3. After installation, bleed the brake system. (Refer to Brake system bleeding)

Components (1)

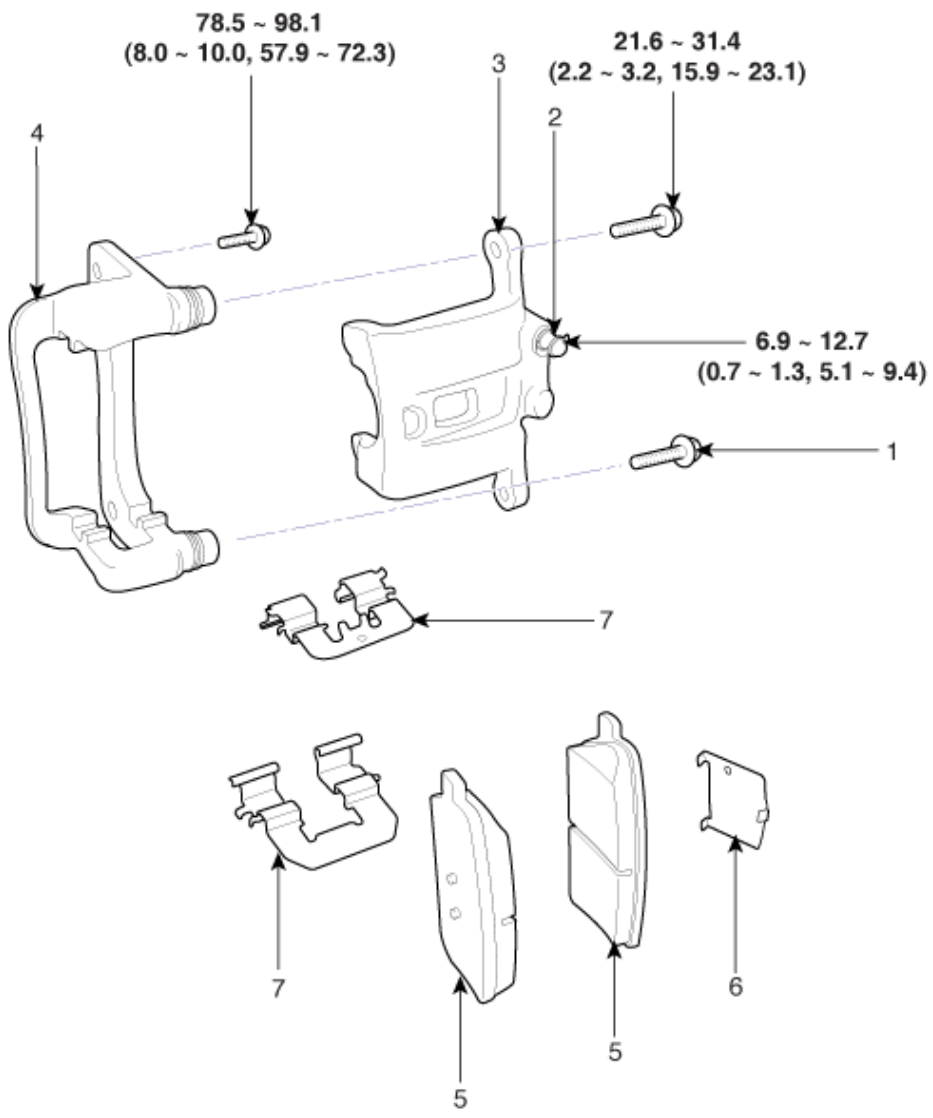

Torque : N.m (kgf.m, lb-ft)

1. Guide rod bolt 2. Bleed screw 3. Caliper body 4. Caliper bracket	5. Inner pad shim 6. Brake pad 7. Pad retainer

Components (2)

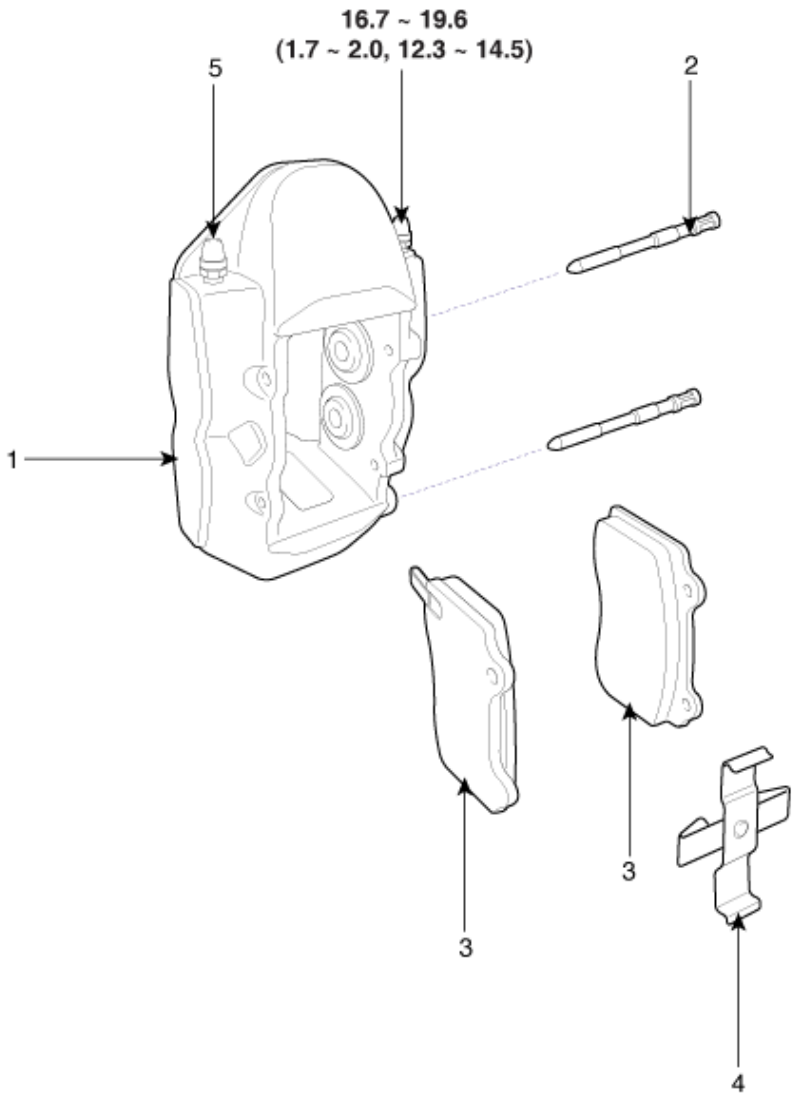

Torque : N.m (kgf.m, lb-ft)

1. Caliper body 2. Guide pin 3. Brake pad	4. Retraction spring 5. Bleed screw

Removal

General caliper type

1. Remove the rear wheel & tire.

Tightening torque :
88.3 ~ 107.9N.m (9.0 ~ 11.0kgf.m, 65.1 ~ 79.6lb-ft)

2. Loosen the hose eye-bolt (B) and caliper mounting bolts (C), then remove the rear caliper assembly (A).

Tightening torque
Brake hose to caliper (B):
24.5 ~ 29.4N.m (2.5 ~ 3.0kgf.m, 18.1 ~ 21.7lb-ft)
Caliper assembly to carrier (C):
78.5 ~ 98.1N.m (8.0 ~ 10.0kgf.m, 57.9 ~ 72.3lb-ft)

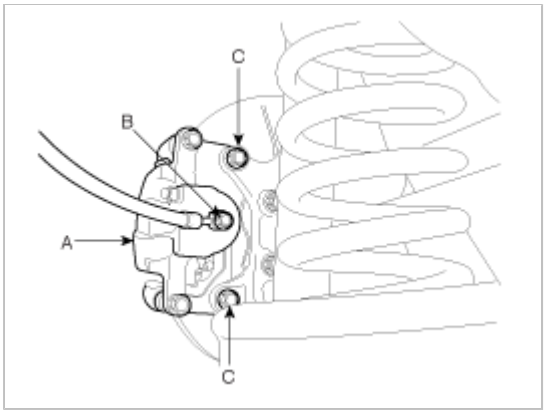

3. Remove the rear brake disc by loosening the screws (A).

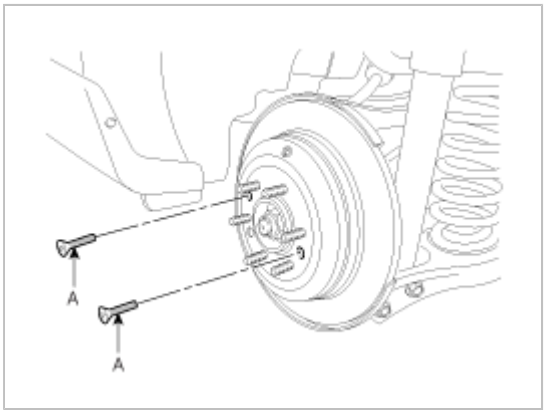

Bremb caliper type

1. Remove the rear wheel & tire.

Tightening torque :
88.3 ~ 107.9N.m (9.0 ~ 11.0kgf.m, 65.1 ~ 79.6lb-ft)

2. Loosen the hose eye-bolt (B) and caliper mounting bolts (C), then remove the rear caliper assembly (A).

Tightening torque
Brake hose to caliper (B):

24.5 ~ 29.4N.m (2.5 ~ 3.0kgf.m, 18.1 ~ 21.7lb-ft)
Caliper assembly to carrier (C):
78.5 ~ 98.1N.m (8.0 ~ 10.0kgf.m, 57.9 ~ 72.3lb-ft)

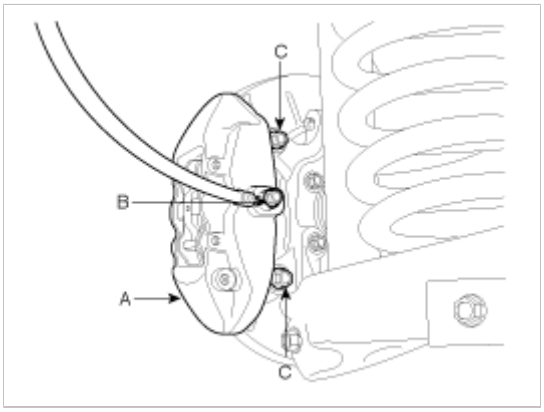

3. Remove the rear brake disc by loosening the screws (A).

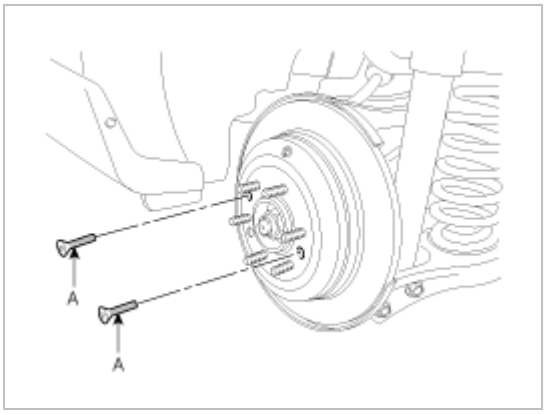

Replacement

Rear Brake Pads (General caliper type)

1. Loosen the guide rod bolt (B) and remove the caliper body (A).

Tightening torque :
21.6 ~ 31.4N.m (2.2 ~ 3.2kgf.m, 15.9 ~ 23.1lb-ft)

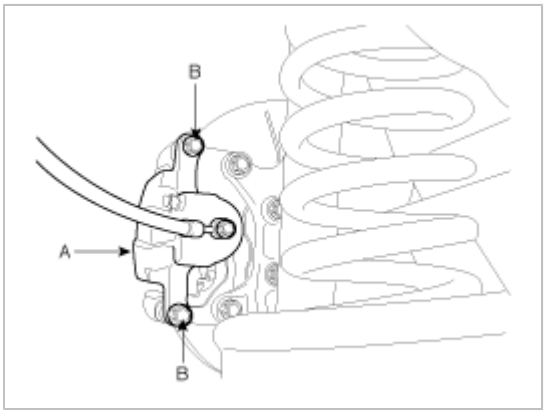

2. Replace pad shim, pad retainers (C) and brake pads (B) in the caliper bracket (A).

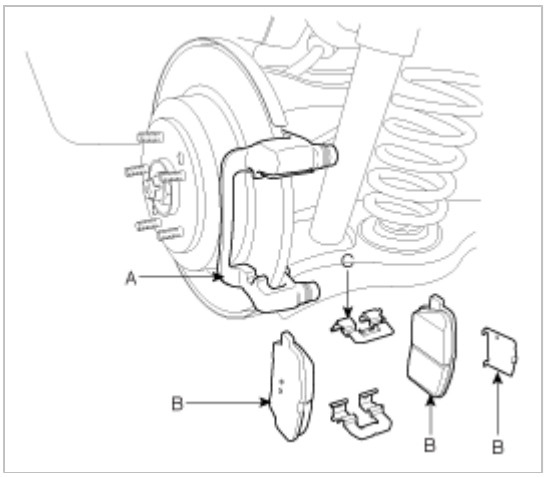

Rear Brake Pads (Bremb caliper type)

1. Remove the guide pin (B) of the lower part with the pin punch (A).

Tightening torque :
21.6 ~ 31.4N.m (2.2 ~ 3.2kgf.m, 15.9 ~ 23.1lb-ft)

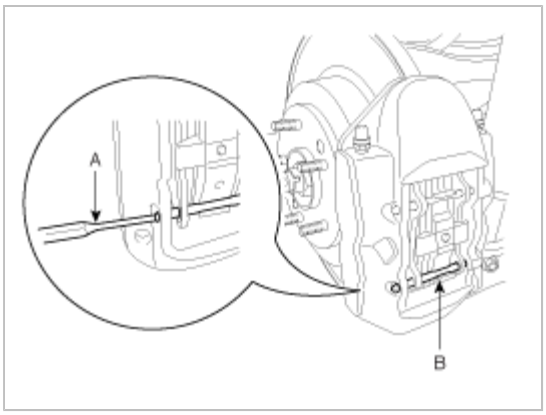

2. Remove the guide pin (C) of the upper part and the retraction spring (D).

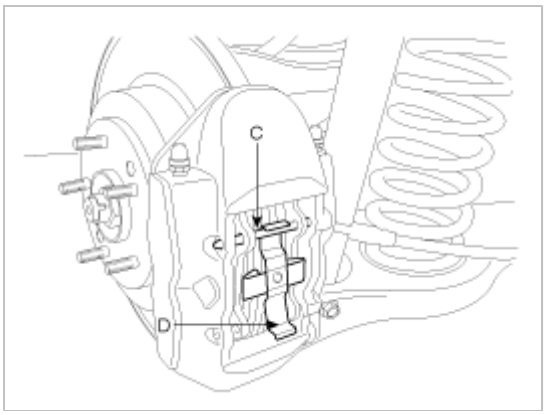

3. Replace brake pads (E) at the caliper body.

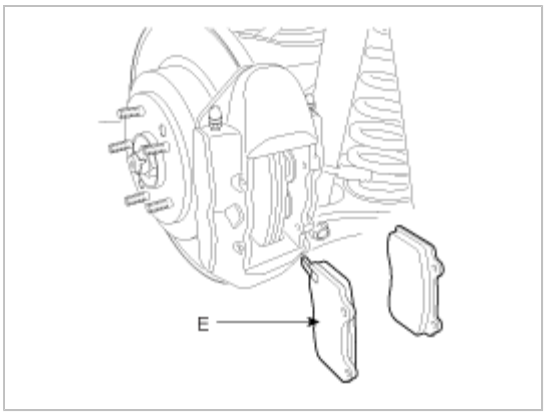

Inspection

Rear Brake Disc Thickness Check

1. Check the brake pads for wear and fade.
2. Check the brake disc for damage and cracks.
3. Remove all rust and contamination from the surface, and measure the disc thickness at 8 points, at least, of same distance (5mm) from the brake disc outer circle.

Brake disc thickness
General caliper type
Standard: 13mm (0.51in)
Service limit: 11.4mm (0.45in)
Deviation: Less than 0.005mm (0.0002in) - circumference
Less than 0.01mm (0.00039in) - radius
Brembo caliper type
Standard: 20mm (0.79in)
Service limit: 18mm (0.71in)
Deviation: Less than 0.01mm (0.0004in) - circumference
Less than 0.04mm (0.0016in) - radius

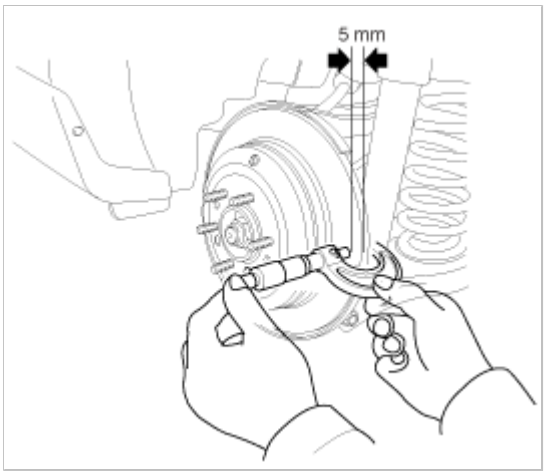

4. If wear exceeds the limit, replace the discs and pad assembly left and right of the vehicle.

Rear Brake Pad Check

1. Check the pad wear. Measure the pad thickness and replace it, if it is less than the specified value.

Pad thickness
General caliper type
Standard value: 9mm (0.354in)

Service limit : 2.0mm (0.0787in)
Brembo caliper type
Standard value : 9.1mm (0.358in)
Service limit : 2.0mm (0.0787in)

2. Check that grease is applied, to sliding contact points and the pad and backing metal for damage.

Rear Brake Disc Runout Check

1. Place a dial gauge about 5mm (0.2 in.) from the outer circumference of the brake disc, and measure the runout of the disc.

Brake disc runout
Limit: 0.035mm (0.00137in.) or less (new one)

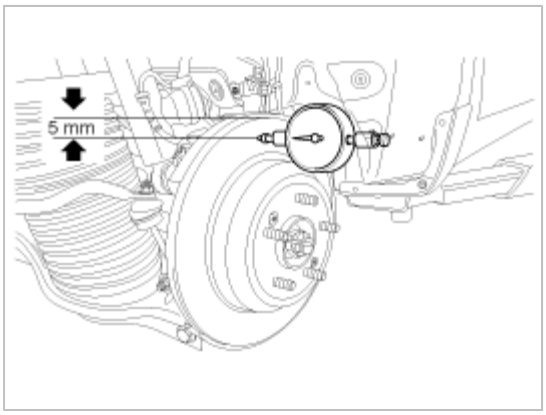

2. If the runout of the brake disc exceeds the limit specification, replace the disc, and then measure the runout again.
3. If the runout exceeds the limit specification, install the brake disc after turning it 180° and then check the runout of the brake disc again.
4. If the runout cannot be corrected by changing the position of the brake disc, replace the brake disc.

Installation

1. Installation is the reverse of removal.
2. Use a SST (09581-11000) when installing the brake caliper assembly.
3. After installation, bleed the brake system. (Refer to Brake system bleeding)

Components (1)

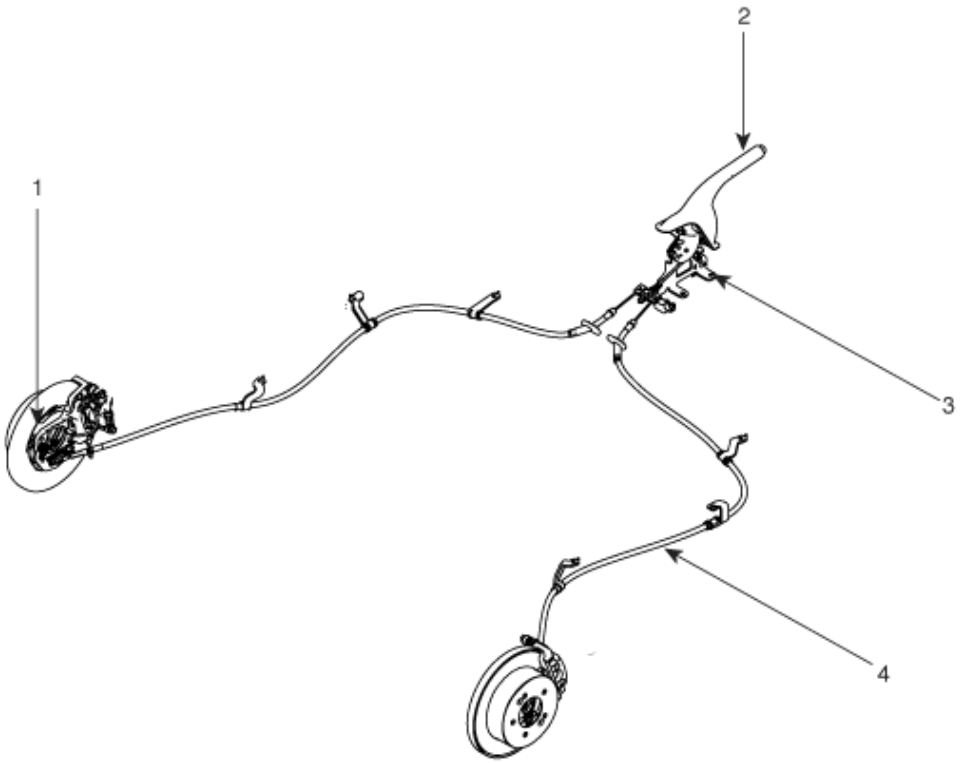

1. Rear parking brake 2. Parking brake lever	3. Parking brake switch 4. Parking brake cable

Components (2)

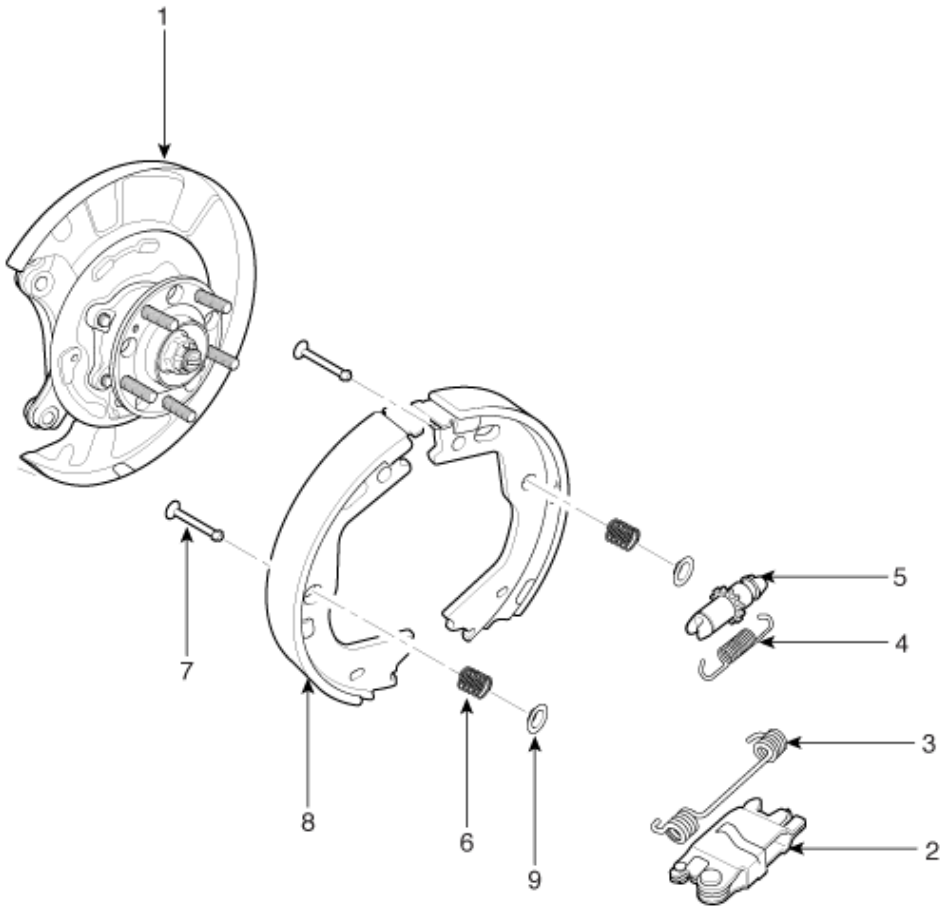

1. Backing plate	4. Lower spring	7. Shoe hold down pin
2. Operating lever	5. Adjuster	8. Parking brake shoe
3. Upper spring	6. Shoe hold down spring	9. Cup washer

Removal

Parking Brake Lever

NOTE

The parking brake cables must not be bent or distorted. This will lead to stiff operation and premature failure.

1. Remove the floor console. (Refer to Body group -"Floor console")
2. Loosen the adjusting nut (A) and the parking brake cables.

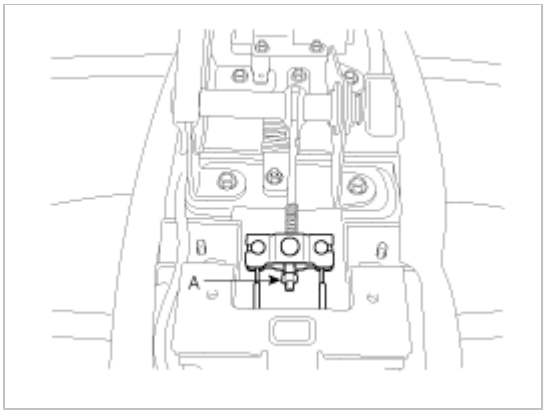

3. Disconnect the connector (A) of parking brake switch.

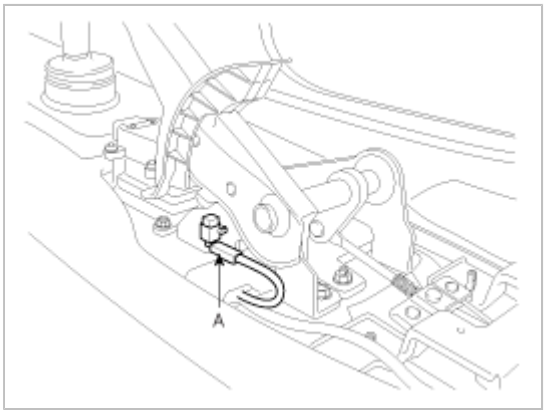

4. Remove the parking brake lever assembly (A) with loosening the bolts.

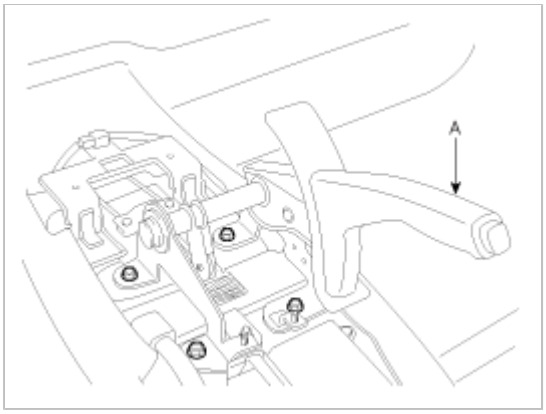

Parking Brake Shoe

1. Raise the vehicle, and make sure it is securely supported.
2. Remove the rear tire and wheel.

3. Remove the brake caliper and Rear disc brake. (Refer to "Rear disc brake removal")
4. Remove the parking brake cable (B), after removing the bolt (A).

Tightening torque :
53.9 ~ 63.7N.m (5.5 ~ 6.5kgf.m, 39.8 ~ 47.0lb-ft)

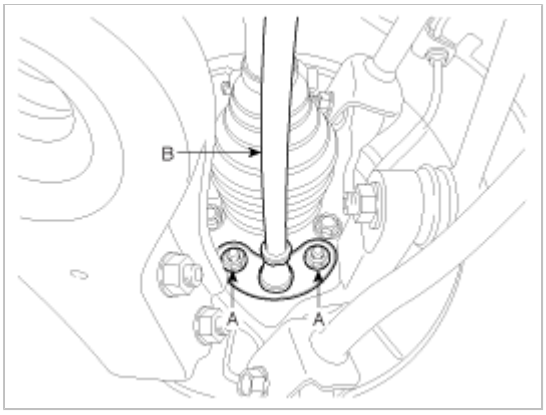

5. Remove the shoe hold down pin (A) and the spring (B) by pushing the retainer spring and turning the pin.

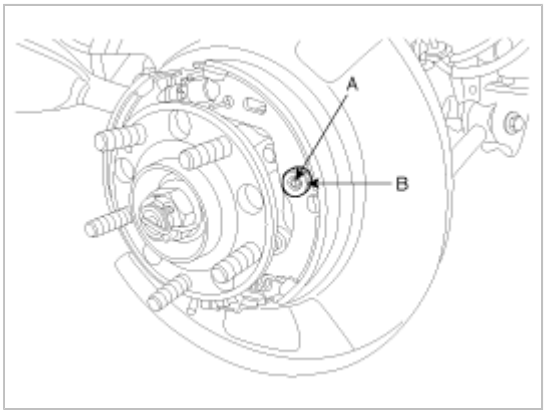

6. Remove the adjuster assembly (B) and the lower return spring (A).

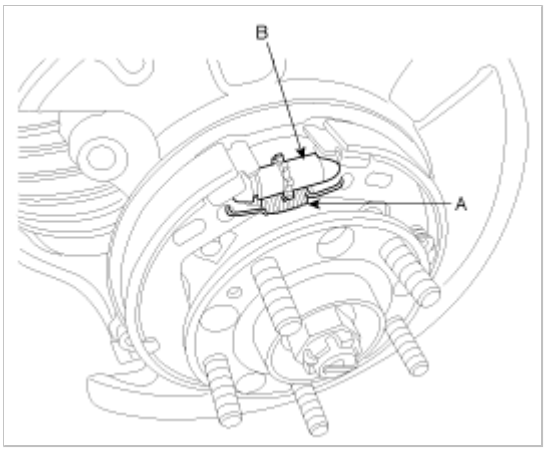

7. Remove the upper return spring (C) and the brake shoes (D).

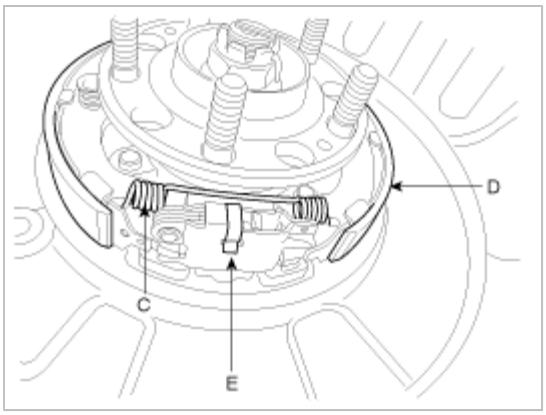

8. Remove the operating lever assembly (E).

Installation

Parking Brake Shoe

1. Install the operating lever assembly (E).

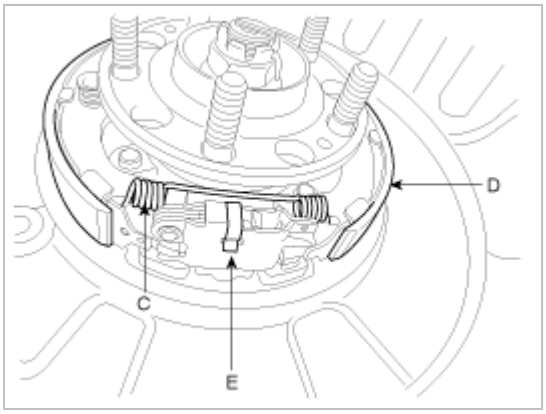

2. Install the upper return spring (C) and the brake shoes (D).
3. Install the adjuster assembly (B) and the lower return spring (A).

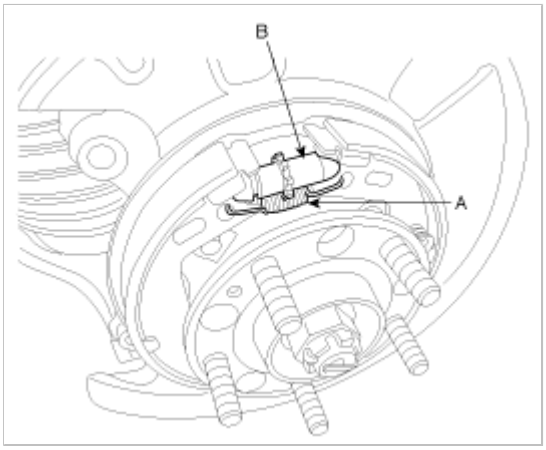

4. While pressing the spring, install the brake shoe hold down pin (A) and spring (B).

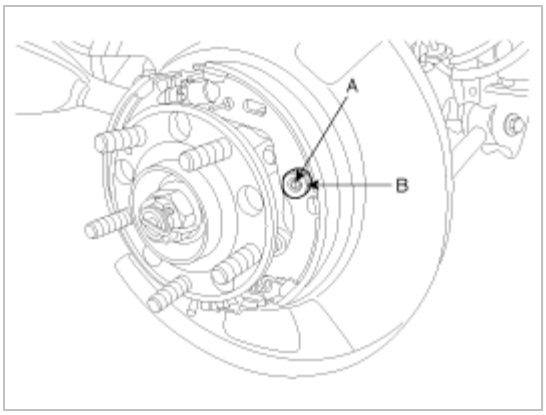

5. Install the parking brake cable (B), then install the bolt (A).

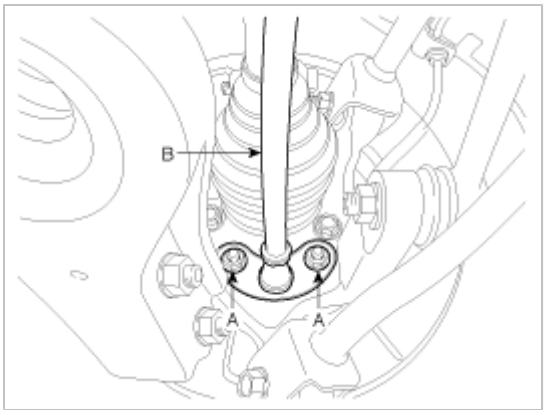

> **NOTE**
>
> How to install the DIH cable (Quick Fit type)
> 1. Put the inner cable into the knuckle hole in DIH lever operating direction when installing the cable (B).
> 2. Confirm by pulling the cable that cable is fixed certainly before installing the bolt (A).

6. Install the rear brake disc, then adjust the rear brake shoe clearance.
   (1) Remove the plug from the disc.

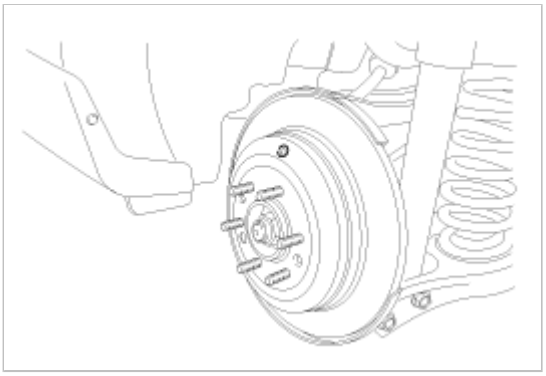

   (2) Rotate the toothed wheel of adjuster by a screw driver until the disc is not moving, and then return it by 5 notches in the opposite direction.
   (3) Install the plug.
7. Install the brake caliper assembly. (Refer to "Rear brake installation")
8. Install the tire and wheel.
9. If the parking brake shoe or the brake disc are replaced a newly one, perform the brake shoe bed-in procedure.
   (1) While operating the parking brake pedal for 69N (7kgf, 15lbf) effort, drive the vehicle 500 meters (0.31 miles) at the speed of 60kph (37.3 mph).

(2) Repeat the above procedure more than two times.

(3) Must be held on at 30% uphill.

> **CAUTION**
>
> After adjusting parking brake, notice following matter;
> 1. Must be free from troubles when the parking pedal is operated at 686 N (70 kgf, 154 lb).
> 2. Check that all parts move smoothly.
> 3. The parking brake indicator lamp must be on after the parking pedal is worked and must be off after the pedal is released.

Parking Brake Lever

1. Install the parking brake lever assembly, then tighten the mounting bolts in alphabetic order.

Tightening torque :
8.8 ~ 13.7N.m(0.9 ~ 1.4kgf.m, 6.5 ~ 10.1lb-ft)

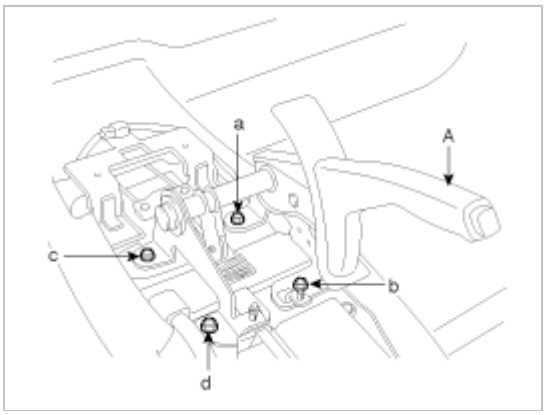

2. Apply a coating of the specified grease to each sliding parts (A) of the ratchet plate or the ratchet pawl.

Specified grease :
Multi purpose grease RheoGel 429 (MS511-54, LT2)

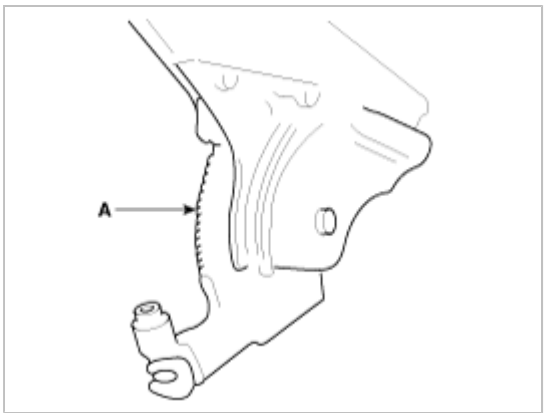

3. Install the parking brake cable adjuster, then adjust the parking brake lever stroke by turning adjusting nut (A).

Parking brake lever stroke :
5 cliks (Pull the lever with 20kg)

> **NOTE**

After repairing the parking brake shoe, adjust the brake shoe clearance, and then adjust the parking brake lever stroke. (Refer to "Parking brake shoe installation")

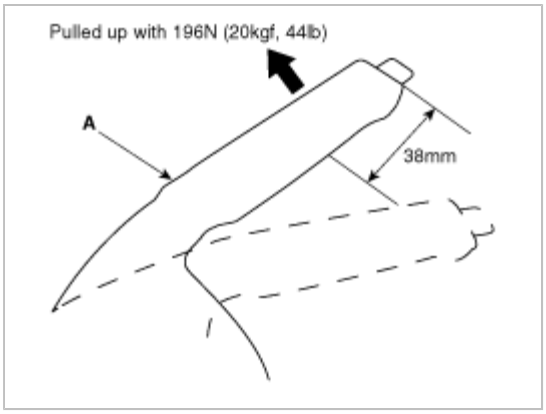

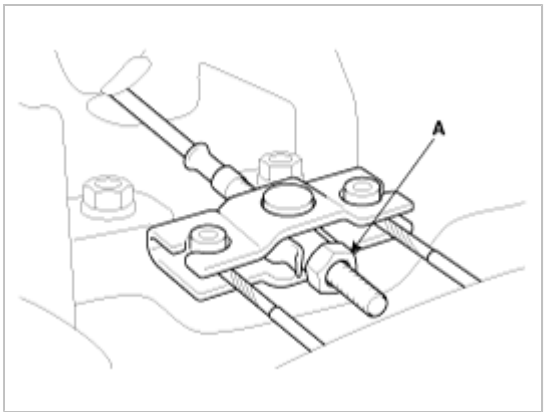

4. Release the parking brake lever fully, and check that parking brakes do not drag when the rear wheels are turned. Readjust if necessary.
5. Make sure that the parking brakes are fully applied when the parking brake lever is pulled up fully.
6. Reconnect the connector (A) of parking brake switch.

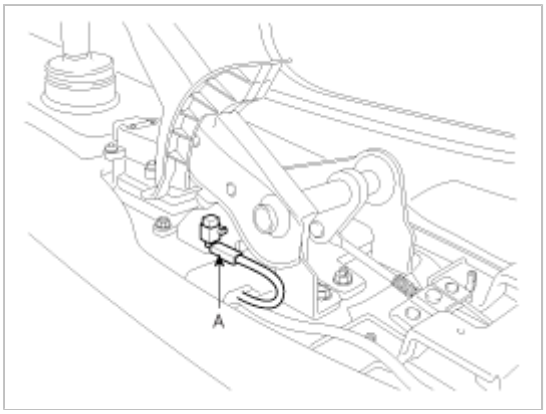

NOTE

Inspect the continuity of parking brake switch.

When the brake lever is pulled : continuity
When the brake lever is released : no continuity

7. Install the floor console.
   (Refer to Body group - "Floor console")

Adjustment

Parking Brake Shoe Clearance Adjustment

1. Raise the vehicle, and make sure it is securely supported.
2. Remove the rear tire and wheel.
3. Remove the plug from the disc.

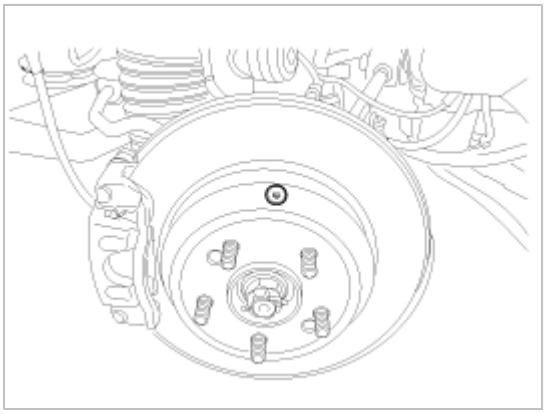

4. Rotate the toothed wheel of adjuster by a screw driver until the disc is not moving, and then return it by 5 notches in the opposite direction.
5. Install the plug on disc and then rear wheel & tire.

Parking Brake Lever Stroke Adjustment

1. Raise the vehicle, and make sure it is securely supported.
2. Remove the floor console. (Refer to Body group - "Floor console")
3. Adjust the parking brake lever stroke by turning adjusting nut (A).

Parking brake lever stroke :
5 cliks (Pull the lever with 20kg)

NOTE

After repairing the parking brake shoe, adjust the brake shoe clearance, and then adjust the parking brake lever stroke. (Refer to "Parking brake shoe installation")

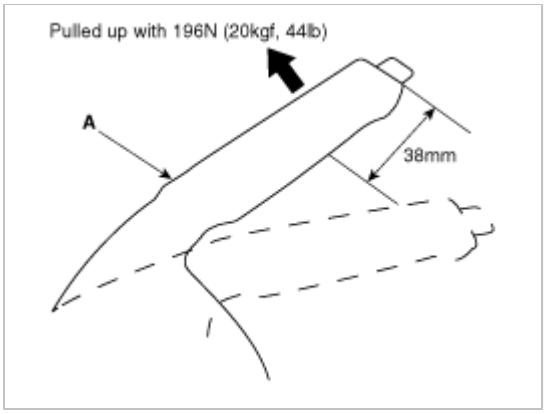

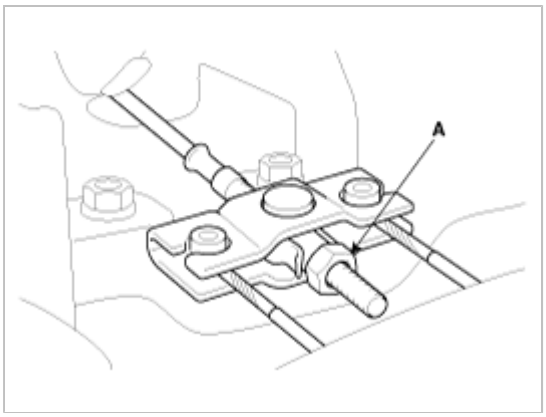

4. Release the parking brake lever fully, and check that parking brakes do not drag when the rear wheels are turned. Readjust if necessary.
5. Make sure that the parking brakes are fully applied when the parking brake lever is pulled up fully.
6. Install the floor console. (Refer to Body group - "Floor console")

Components

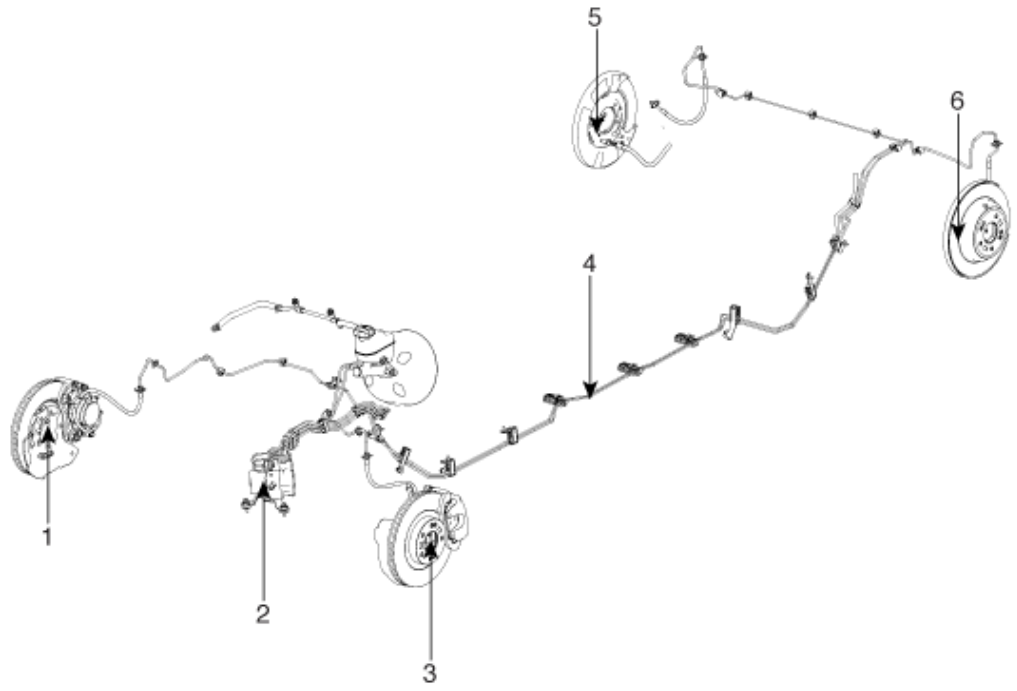

1. Front right wheel speed sensor	4. Hydrauric line
2. ABS control module (HECU)	5. Rear right wheel speed sensor
3. Front left wheel speed sensor	6. Rear left wheel speed sensor

Description

This specification applies to HCU(Hydraulic Control Unit) and ECU(Electronic Control Unit) of the HECU.(Hydraulic and Electronic Control Unit)
This specification is for the wiring design and installation of ABS/ESC ECU.
This unit has the functions as follows.

- Input of signal from Pressure sensor, Steering angle sensor, Yaw & Lateral G sensor,the wheel speed sensors attached to each wheel.
- Control of braking force / traction force / yaw moment.
- Failsafe function.
- Self diagnosis function.
- Interface with the external diagnosis tester.

Installation position : engine compartment

- Brake tube length from Master cylinder port to HECU inlet port should be max. 1m
- The position should not be close to the engine block and not lower than the wheel.

Operation

The ECU shall be put into operation by switching on the operating voltage (IGN).
On completion of the initialization phase, the ECU shall be ready for operation.
In the operating condition, the ECU shall be ready, within the specified limits (voltage and temperature), to process the signals offered by the various sensors and switches in accordance with the control algorithm defined by the software and to control the hydraulic and electrical actuators.

Wheel sensor signal processing

The ECU shall receive wheel speed signal from the four active wheel sensors.
The wheel signals are converted to voltage signal by the signal conditioning circuit after receiving current signal from active wheel sensors and given as input to the MCU.

Solenoid valve control

When one side of the valve coil is connected to the positive voltage that is provided through the valve relay and the other side is connected to the ground by the semiconductor circuit, the solenoid valve goes into operation.
The electrical function of the coils are always monitored by the valve test pulse under normal operation conditions.

Voltage limits

- Overvoltage
  When overvoltage is detected(above 17 ± 0.5 V), the ECU switches off the valve relay and shuts down the system.
  When voltage is returned to operating range, the system goes back to the normal condition after the initialization phase.
- Undervoltage
  In the event of undervoltage(below 10V), ABS control shall be inhibited and the warning lamp shall be turned on.
  When voltage is returned to operating range, the warning lamp is switched off and ECU returns to normal operating mode.

Pump motor checking

The ECU performs a pump motor test at a speed of 15 km/h(9 MPH) once after IGN is switched on.

Diagnostic interface

Failures detected by the ECU are encoded on the ECU, stored in a EEPROM and read out by diagnostic equipment when the ignition switch is turned on.
The diagnosis interface can also be used for testing the ECU during production of the ECU and for actuating the HCU in the test line of manufactories (Air-bleeding line or Roll and Brake Test line).

Warning lamp module

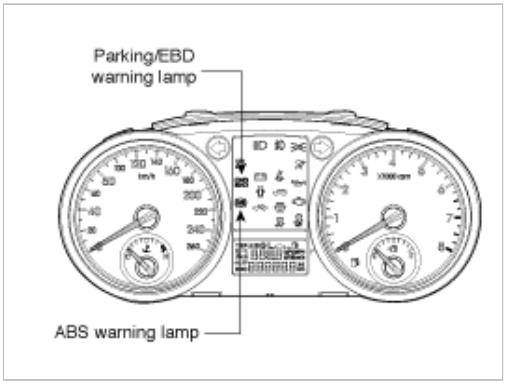

1. ABS Warning Lamp module
   The active ABS warning lamp module indicates the self-test and failure status of the ABS.
   The ABS warning lamp shall be on:
   A. During the initialization phase after IGN ON. (continuously 3 seconds).
   B. In the event of inhibition of ABS functions by failure.
   C. During diagnostic mode.
   D. When the ECU Connector is seperated from ECU.
2. PARKING/EBD warning lamp module
   The active EBD warning lamp module indicates the self-test and failure status of the EBD.
   However, in case the Parking Brake Switch is turned on, the EBD warning lamp is always turned on regardless of EBD functions.
   The EBD warning lamp shall be on:
   A. During the initialization phase after IGN ON. (continuously 3 seconds).
   B. When the Parking Brake Switch is ON or brake fluid level is low.
   C. When the EBD function is out of order.
   D. During diagnostic mode.
   E. When the ECU Connector is seperated from ECU.

ABS Control

1. NORMAL BRAKING without ABS
   Under the normal braking, voltage is not supplied to solenoid valve, inlet valve is opened and outlet valve is closed.When the brake is depressed, brake fluid is supplied to the wheel cylinder via solenoid valve to activate the brake.When the brake is released, brake fluid is back to the master cylinder via inlet valve and check valve.

Solenoid valve	State	Valve	Passage	Pump motor
Inlet valve (NO)	OFF	Open	Master cylinder ⇔ Wheel cylinder	OFF
Outlet valve (NC)	OFF	Close	Wheel cylinder ⇔ Reservoir	

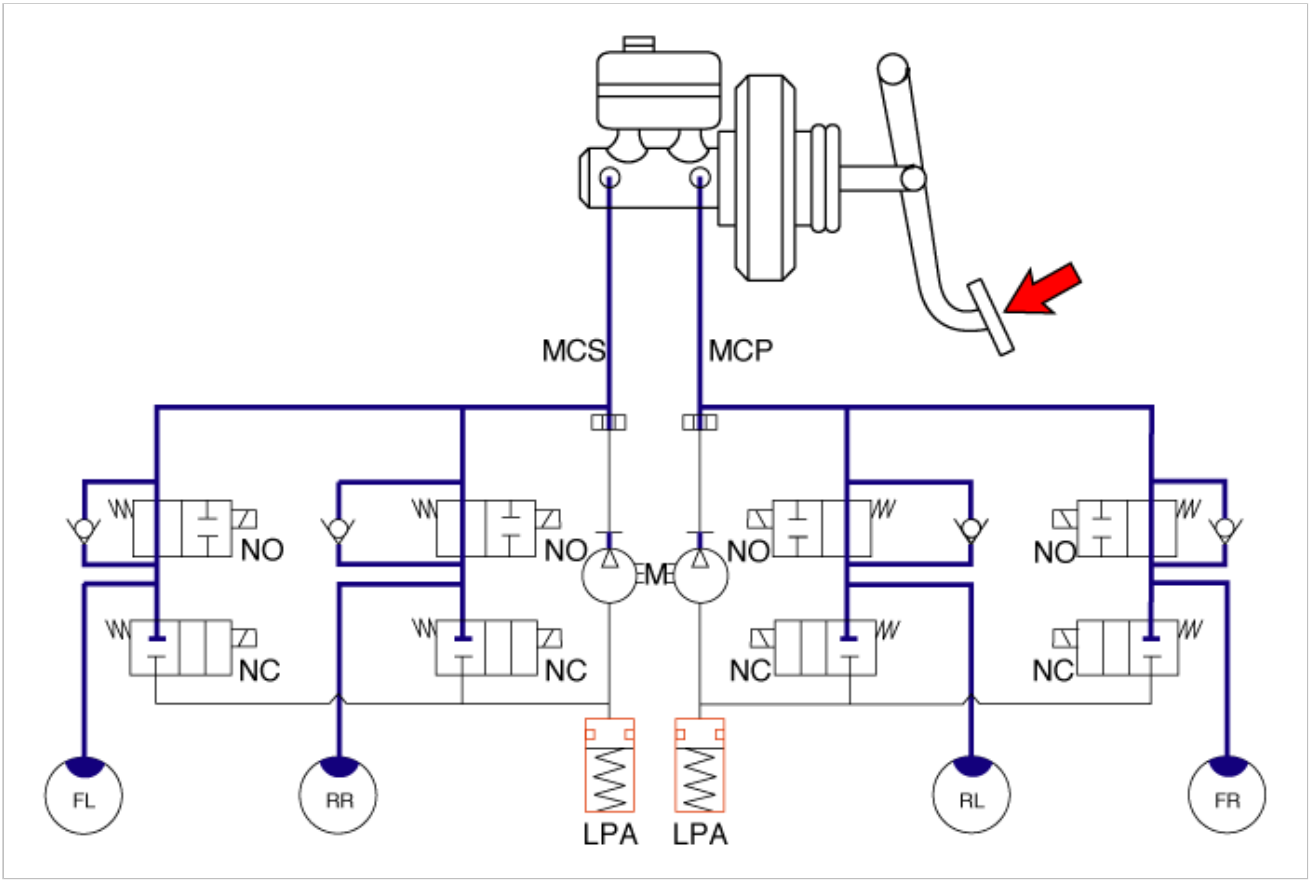

2. Dump Mode
   Under the emergency braking, if the wheels start to lock up, HECU sends a signal to the solenoid valve to decrease the brake fluid, then voltage is supplied to each solenoid. At this time inlet valve is closed and brake fluid is blocked from the master cylinder. Conversely outlet valve is opened and brake fluid passes through wheel cylinder to reservoir, resulting in pressure decrease.

Solenoid	State	Valve	Passage	Pump motor
Inlet valve (NO)	ON	Close	Master cylinder ⇔ Wheel cylinder	ON
Outlet valve (NC)	ON	Open	Wheel cylinder ⇔ Reservoir	

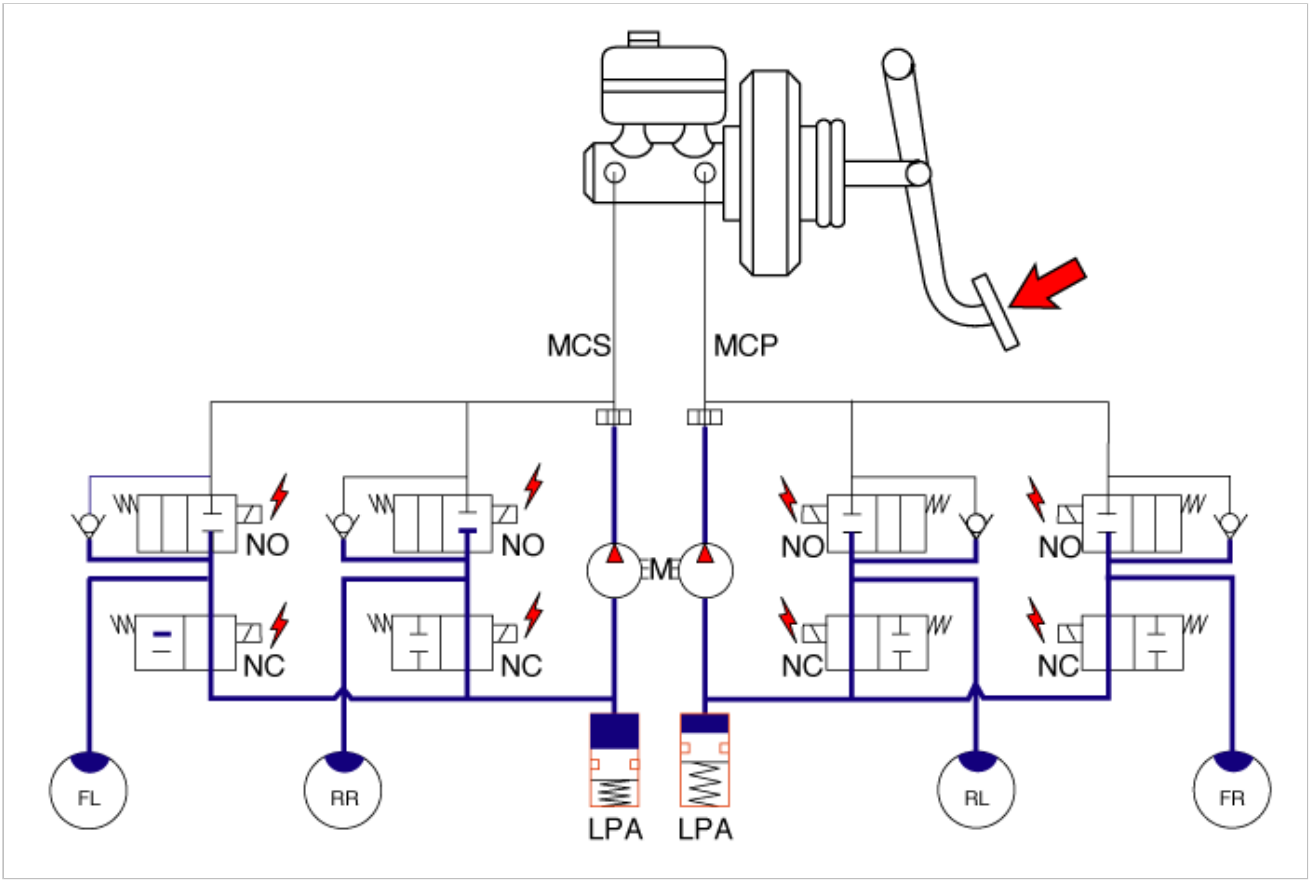

3. Hold Mode
When the brake fluid pressure is maximally decreased in wheel cylinder, HECU sends a signal to solenoid valve to keep the fluid pressure, voltage is supplied to inlet valve but it is not supplied to outlet valve. At this time inlet and outlet valves are closed and brake fluid is kept in wheel cylinder.

Solenoid	State	Valve	Passage	Pump motor
Inlet valve (NO)	ON	Close	Master cylinder ⇔ Wheel cylinder	OFF
Outlet valve (NC)	OFF	Close	Wheel cylinder ⇔ Reservoir	

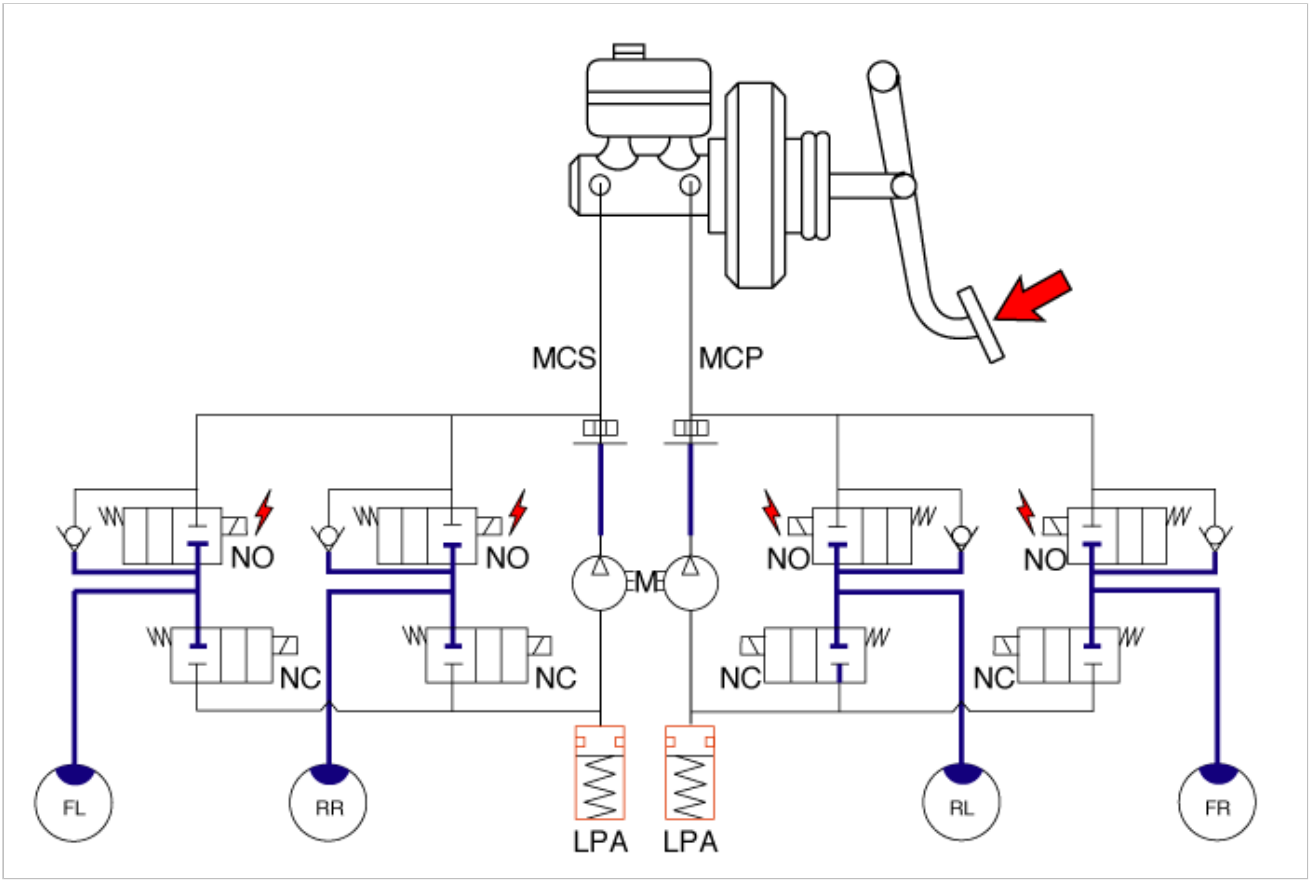

4. Increase Mode
   If HECU determines there's no lock-up in the wheel, HECU cuts voltage to solenoid valve. So voltage is not supplied to each solenoid valve, brake fluid passes through the inlet valve to wheel cylinder, resulting in pressure increase.

Solenoid	State	Valve	Passage	Pump motor
Inlet valve (NO)	OFF	Open	Master cylinder ⇔ Wheel cylinder	ON
Outlet valve (NC)	OFF	Close	Wheel cylinder ⇔ Reservoir	

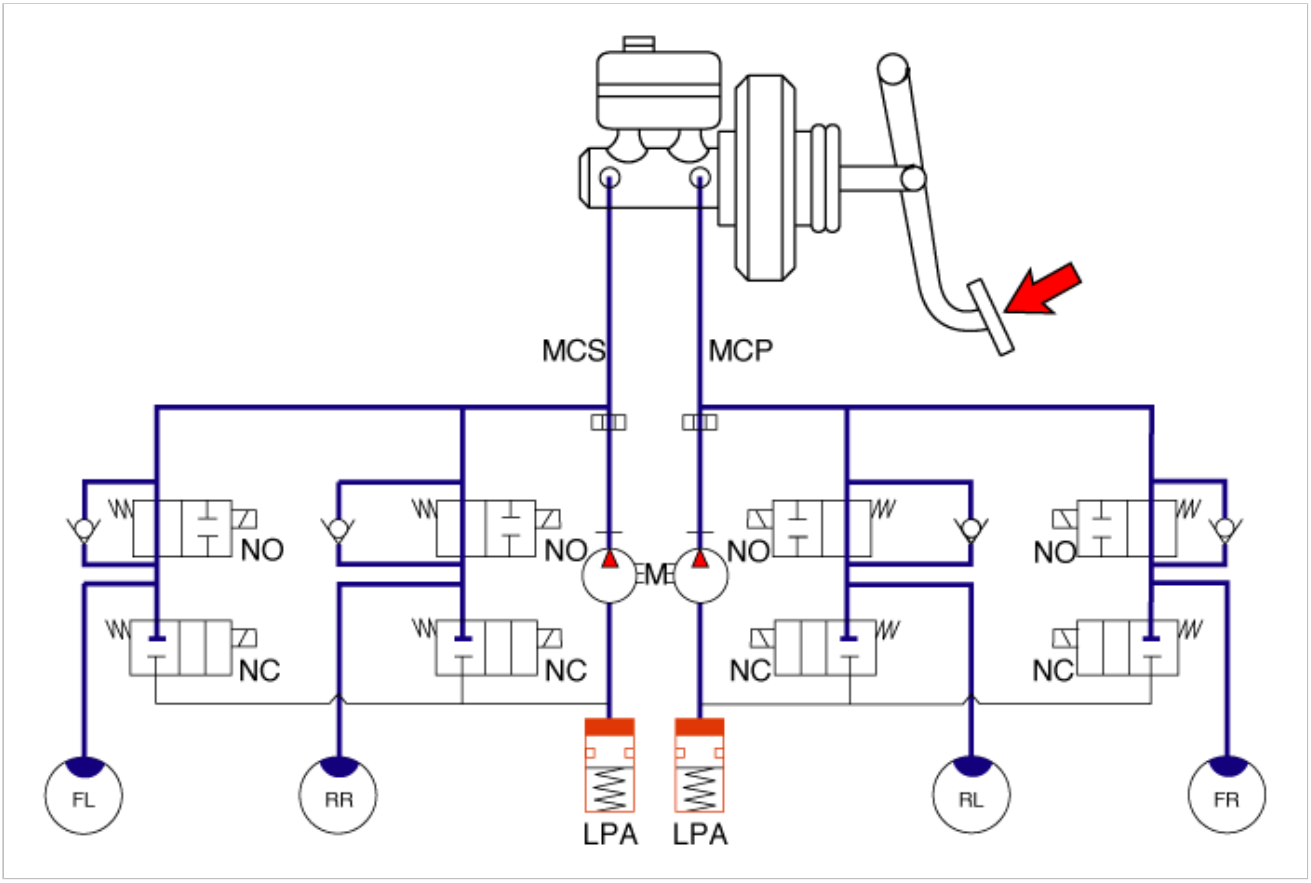

ABS HECU External Diagram

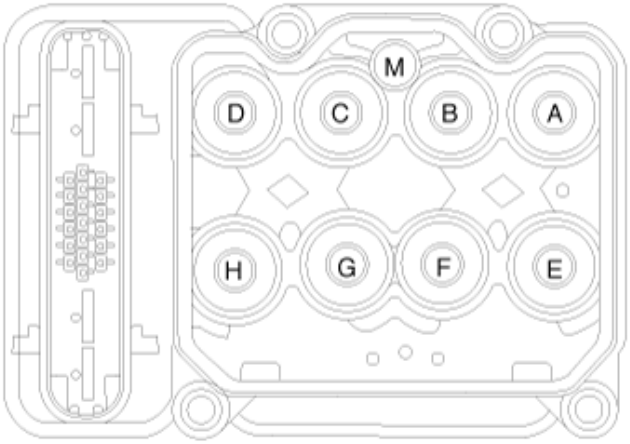

A : INLET VALVE (FR)
B : INLET VALVE (RL)
C : INLET VALVE (RR)
D : INLET VALVE (FL)
E : OUTLET VALVE (FR)
F : OUTLET VALVE (RL)
G : OUTLET VALVE (RR)
H : OUTLET VALVE (FL)
M : MOTOR Connector

Hydraulic System Diagram

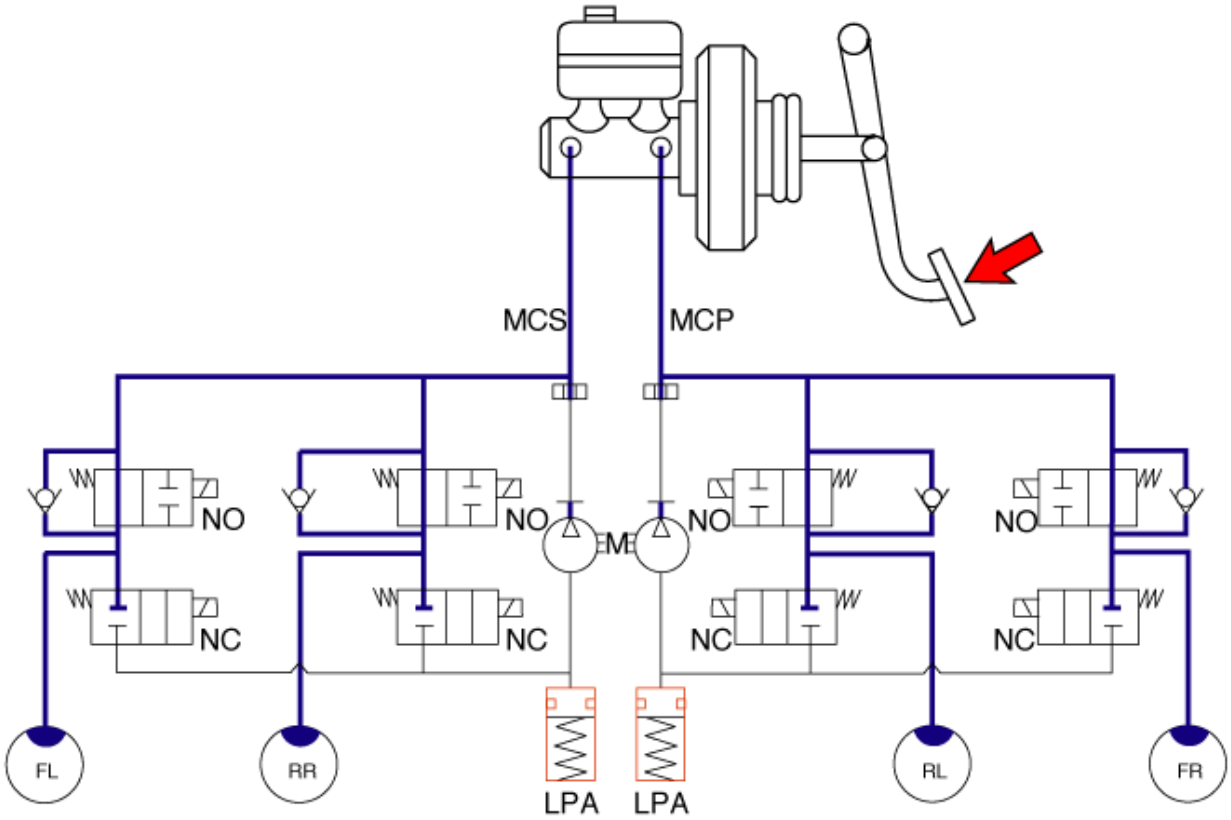

MCP : Primary master cylinder
MCS : Secondary master cylinder
LPA : Low pressure accumulator

M : Motor pump
NO : Normal open valve
NC : Normal close valve

Circuit Diagram - ABS(1)

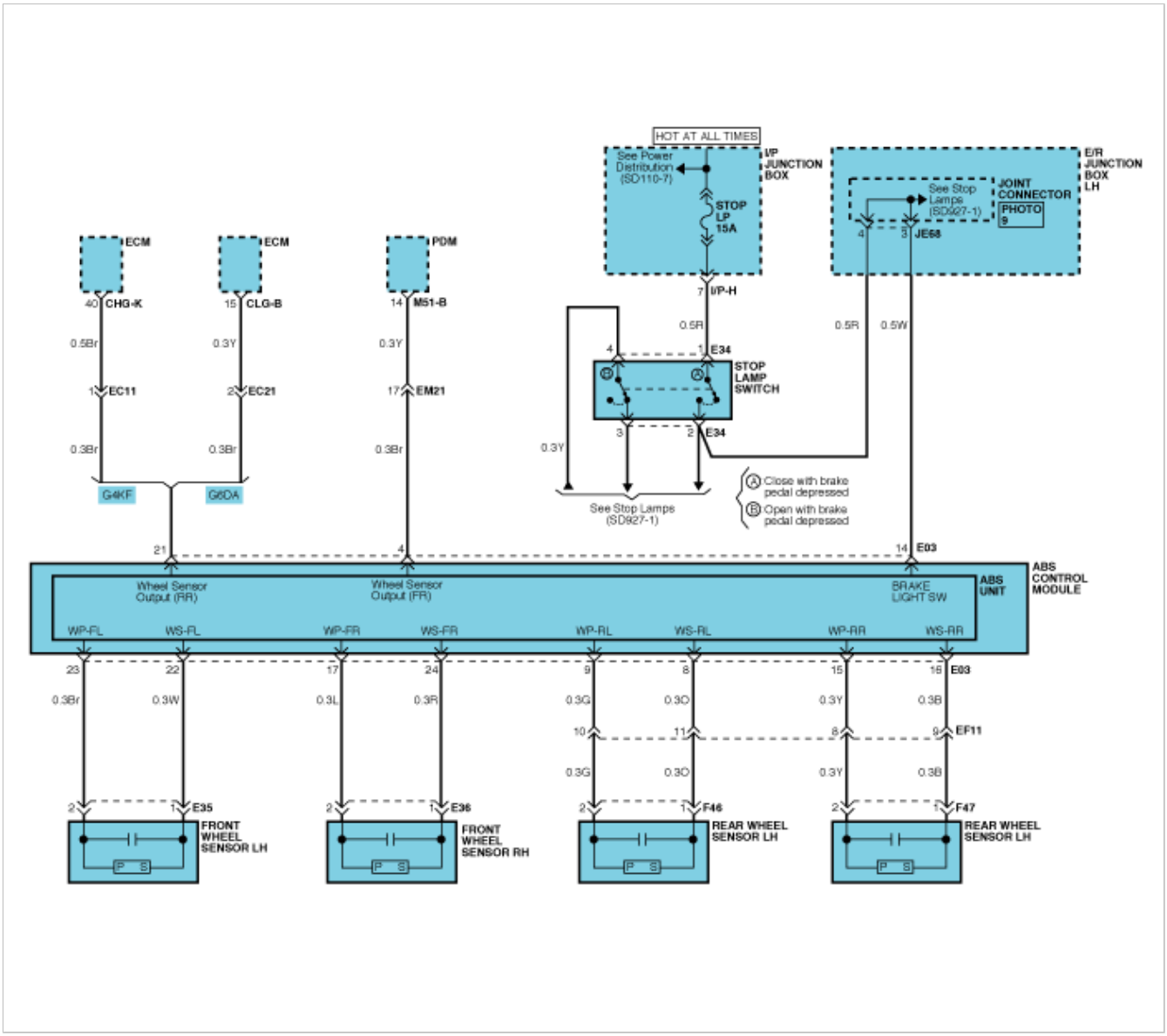

Circuit Diagram - ABS(2)

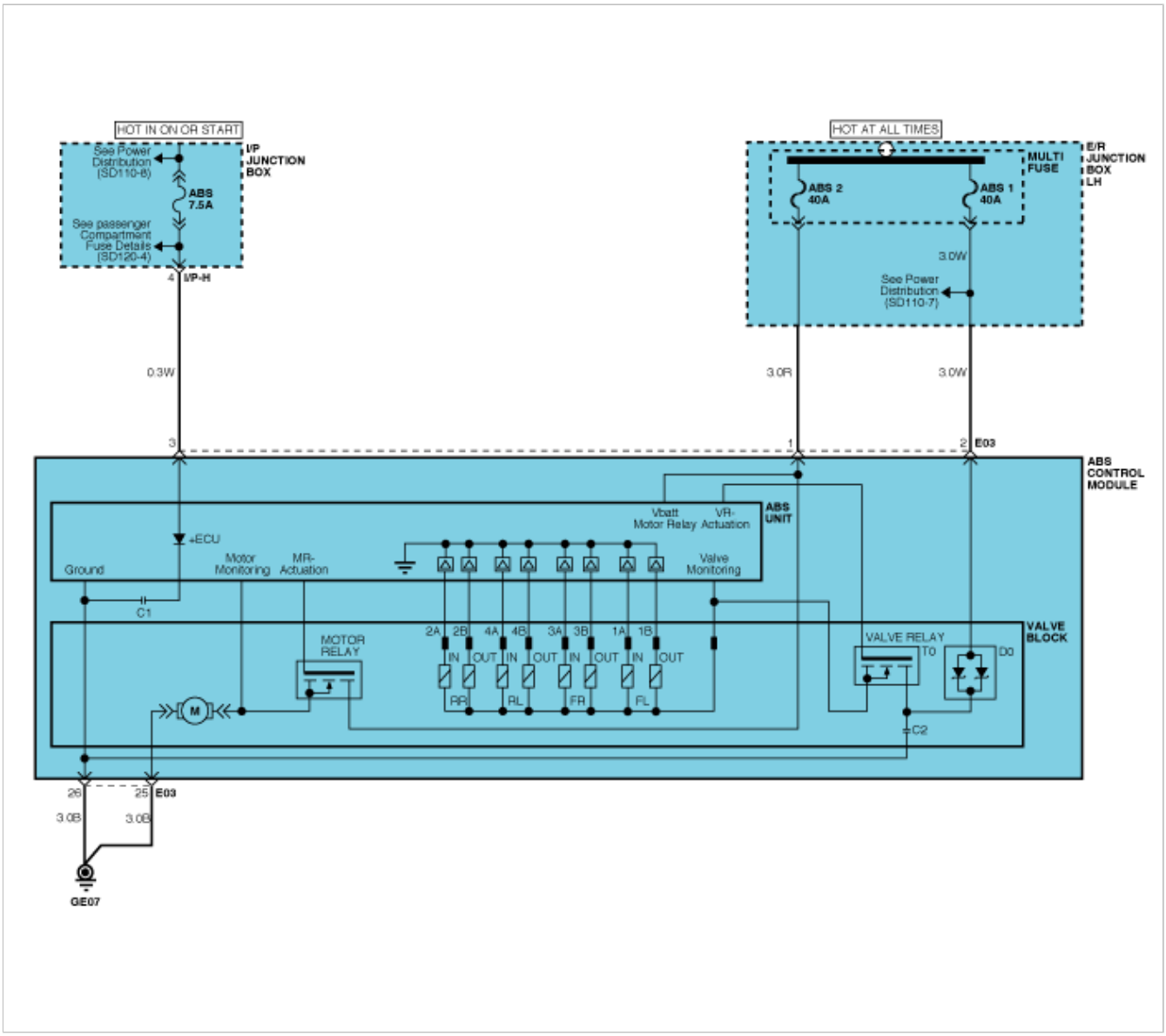

Circuit Diagram - ABS(3)

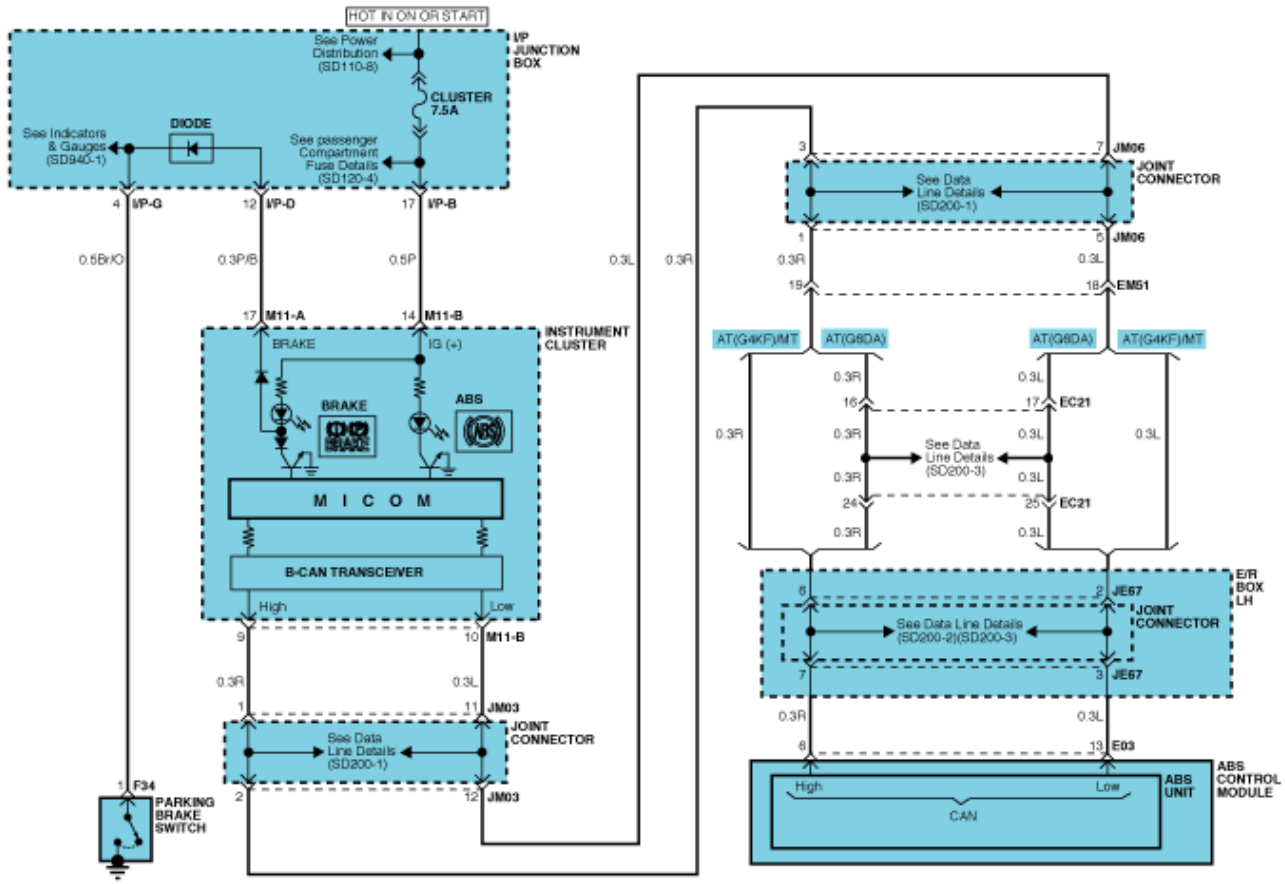

ABS Connector Input / Output

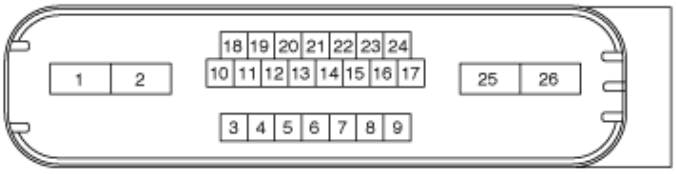

Connector Terminal		Specification	Remark
No	Description		
3	IGNITION1(+)	Over voltage range: 17 ± 0.5V Operating voltage range: 9.5 ± 0.5V < V < 17 ± 0.5V Low voltage range: 7.0 ± 0.5V < V < 9.5 ± 0.5V Max. current: I < 300mA Hardware shutdown voltage : V < 6.0V	
2	POS. BATTERY.(SOLENOID)	Max leakage current : I < 0.8mA Operating voltage range: 9.5 ± 0.5V < V < 17 ± 0.5V Max current : I < 40A	

1	POS, BATTERY.(MOTOR)	Operating voltage range: 9.5 ± 0.5V < V < 16.5 ± 0.5V Rush current : I < 100A Max current : I < 40A Max leakage current : I < 0.2mA	
26	GROUND	Rated current : I < 300mA Max. current: I < 40A	
25	PUMP MOTOR GROUND	Rush current : I < 100A Max current : I < 40A	
14	BRAKE LIGHT SWITCH	Input voltage low: 0V ≤ V ≤ 3.0V Input voltage High: 7.0V ≤ V ≤ 16.0V	
23	SENSOR FRONT LEFT POWER	Output voltage : IGN[V] ± 1V Output current : Max 30mA	
17	SENSOR FRONT RIGHT POWER		
9	SENSOR REAR LEFT POWER		
15	SENSOR REAR RIGHT POWER		
22	SENSOR FRONT LEFT SIGNAL	Input current LOW : 5.9 ~ 8.4mA Input current HIGH : 11.8 ~ 16.8mA Frequency range : 1 ~ 2500Hz Input duty : 50 ± 20%	
24	SENSOR FRONT RIGHT SIGNAL		
8	SENSOR REAR LEFT SIGNAL		
16	SENSOR REAR RIGHT SIGNAL		
13	CAN BUS LINE (LOW)	Max. current : I < 10mA	
6	CAN BUS LINE (HIGH)		
4	SENSOR FRONT RIGHT OUTPUT	Max. current : I < 16mA External pull up resister : 1kΩ < R Output duty : 50 ± 20%	
21	SENSOR REAR RIGHT OUTPUT		

Standard flow of diagnostic troubleshooting

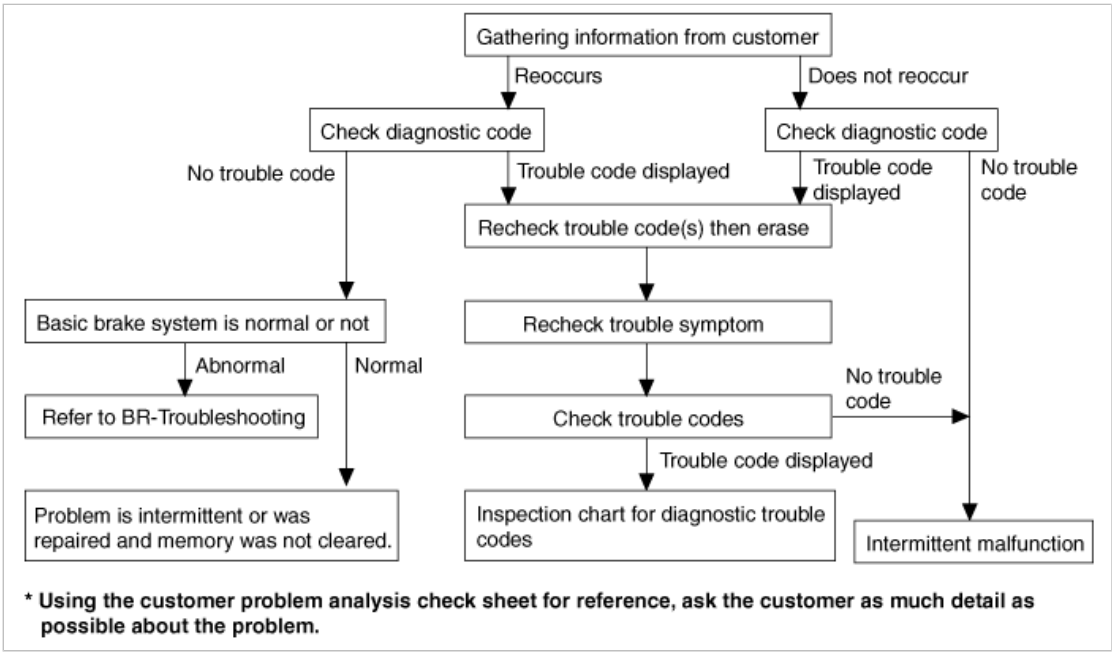

*** Using the customer problem analysis check sheet for reference, ask the customer as much detail as possible about the problem.**

Notes with regard to diagnosis

The phenomena listed in the following table are not abnormal.

Phenomenon	Explanation
System check sound	When starting the engine, a thudding sound can sometimes be heard coming from inside the engine compartment. This is because the system operation check is being performed.
ABS operation sound	1. Sound of the motor inside the ABS hydraulic unit operation (whine). 2. Sound is generated along with vibration of the brake pedal (scraping). 3. When ABS operates, sound is generated from the vehicle chassis due to repeated brake application and release (Thump : suspension; squeak: tires)
ABS operation (Long braking distance)	For road surfaces such as snow-covered and gravel roads, the braking distance for vehicles with ABS can sometimes be longer than that for other vehicles. Accordingly, advise the customer to drive safely on such roads by lowering the vehicle speed.
Diagnosis detection conditions can vary depending on the diagnosis code. When checking the trouble symptom after the diagnosis code has been erased, ensure that the requirements listed in "Comment" are met.	

ABS Check sheet

ABS Check Sheet

Inspector's Name _____

Customer's Name		Registration No.	
		Registration Year	/ /
		VIN.	
Date Vehicle Brought In	/ /	Odometer	Km Miles

Date the Problem First Occurred	/ /
Frequency of Occurence of Problem	☐ Continuous ☐ Intermittent (times a day)

Symptoms	☐ ABS does not operate.		
	☐ ABS does not operate efficiently.	☐ Intermittent (times a day)	
	ABS Warning Light Abnormal	☐ Remains ON	☐ Does not light up

Diagnostic Trouble Code Check	1st Time	☐ Normal Code	☐ Malfunction Code (Code)
	2nd Time	☐ Normal Code	☐ Malfunction Code (Code)

Problem symptoms table

Symptom	Suspect Area
ABS does not operate.	Only when 1.~4. are all normal and the problem is still occurring, replace the HECU. 1. Check the DTC reconfirming that the normal code is output. 2. Power source circuit. 3. Speed sensor circuit. 4. Check the hydraulic circuit for leakage.
ABS does not operate intermittently.	Only when 1.~4. are all normal and the problem is still occurring, replace the ABS actuator assembly. 1. Check the DTC reconfirming that the normal code is output. 2. Wheel speed sensor circuit. 3. Stop lamp switch circuit. 4. Check the hydraulic circuit for leakage.
Communication with Hi-scan (pro) is not possible. (Communication with any system is not possible)	1. Power source circuit 2. Diagnosis line
Communication with Hi-scan (pro) is not possible. (Communication with ABS only is not possible)	1. Power source circuit 2. Diagnosis line 3. HECU
When ignition key is turned ON (engine OFF), the ABS warning lamp does not light up.	1. ABS warning lamp circuit 2. HECU
Even after the engine is started, the ABS	1. ABS warning lamp circuit

warning lamp remains ON.	2. HECU

CAUTION

During ABS operation, the brake pedal may vibrate or may not be able to be depressed. Such phenomena are due to intermittent changes in hydraulic pressure inside the brake line to prevent the wheels from locking and is not an abnormality.

ABS Does Not Operate.

Detecting condition

Trouble Symptoms	Possible Cause
Brake operation varies depending on driving conditions and road surface conditions, so diagnosis can be difficult. However if a normal DTC is displayed, check the following probable cause. When the problem is still occurring, replace the ABS control module.	- Faulty power source circuit - Faulty wheel speed sensor circuit - Faulty hydraulic circuit for leakage - Faulty HECU

Inspection procedures

DTC Inspection

1. Connect the scan tool with the data link connector and turn the ignition switch ON.
2. Verify that the normal code is output.
3. Is the normal code output?

NO	▸ Check the power source circuit.
YES	▸ Erase the DTC and recheck using scan tool.

Check the power source circuit

1. Disconnect the connector from the ABS control module.
2. Turn the ignition switch ON, measure the voltage between terminal 3 of the ABS control module harness side connector and body ground.

Specification: approximately B+

3. Is the voltage within specification?

YES	▸ Check the ground circuit.
NO	▸ Check the harness or connector between the fuse (10A) in the engine compartment junction block and the ABS control module. Repair if necessary.

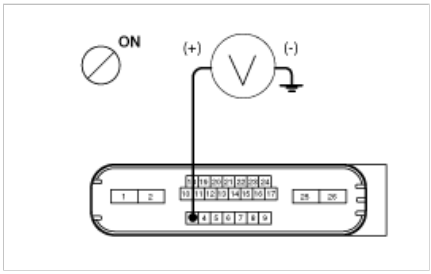

Check the ground circuit

1. Disconnect the connector from the ABS control module.
2. Check for continuity between terminals 25, 26 of the ABS control module harness side connector and ground point.
3. Is there continuity?

YES	▸ Check the wheel speed sensor circuit.
NO	▸ Repair an open in the wire and ground point.

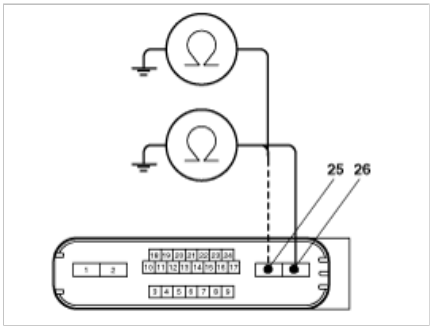

Check the wheel speed sensor circuit

1. Refer to the DTC troubleshooting procedures.
2. Is it normal?

YES	▸ Check the hydraulic circuit for leakage.
NO	▸ Repair or replace the wheel speed sensor.

Check the hydraulic circuit for leakage

1. Refer to the hydraulic lines.
2. Inspect leakage of the hydraulic lines.
3. Is it normal?

YES	▸ The problem is still occurring, replace the ABS control module.
NO	▸ Repair the hydraulic lines for leakage.

ABS Does Not Operate (Intermittently).

Detecting condition

Trouble Symptoms	Possible Cause
Brake operation varies depending on driving conditions and road surface conditions, so diagnosis can be difficult. However if a normal DTC is displayed, check the following probable cause. When the problem is still occurring, replace the ABS control module.	- Faulty power source circuit - Faulty wheel speed sensor circuit - Faulty hydraulic circuit for leakage - Faulty HECU

Inspection procedures

DTC Inspection

1. Connect the scan tool with the data link connector and turn the ignition switch ON.
2. Verify that the normal code is output.
3. Is the normal code output?

NO	▸ Check the wheel speed sensor circuit.
YES	▸ Erase the DTC and recheck using scan tool.

Check the wheel speed sensor circuit

1. Refer to the DTC troubleshooting procedures.
2. Is it normal?

YES	▸ Check the stop lamp switch circuit.
NO	▸ Repair or replace the wheel speed sensor.

Check the stop lamp switch circuit

1. Check that stop lamp lights up when brake pedal is depressed and turns off when brake pedal is released.
2. Measure the voltage between terminal 14 of the ABS control module harness side connector and body ground when brake pedal is depressed.

Specification : approximately B+

3. Is the voltage within specification?

YES	▸ Check the hydraulic circuit for leakage.
NO	▸ Repair the stop lamp switch. Repair an open in the wire between the ABS control module and the stop lamp switch.

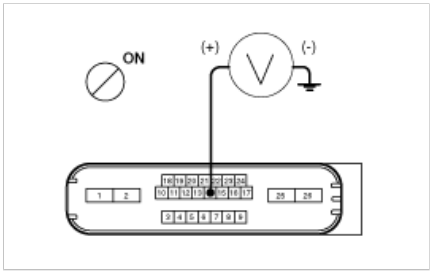

Check the hydraulic circuit for leakage

1. Refer to the hydraulic lines.
2. Inspection leakage of the hydraulic lines.
3. Is it normal?

YES	▸ The problem is still occurring, replace the ABS control module.
NO	▸ Repair the hydraulic lines for leakage.

Communication with Scan-Tool is not possible.
(Communication with any system is not possible)

Detecting condition

Trouble Symptoms	Possible Cause
Possible defect in the power supply system (including ground) for the diagnosis line.	- An open in the wire - Poor ground - Faulty power source circuit

Inspection procedures

Check The Power Supply Circuit For The Diagnosis

1. Measure the voltage between terminal 9 of the data link connector and body ground.

Specification : approximately B+

2. Is voltage within specification?

YES	▸ Check the ground circuit for the diagnosis.
NO	▸ Repair an open in the wire. Check and replace fuse (15A) from the engine compartment junction block.

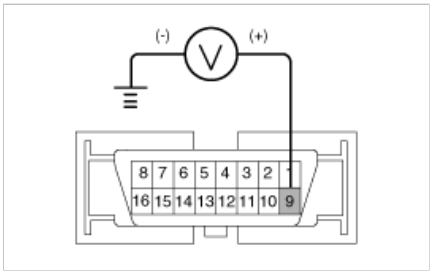

Check the ground circuit for the diagnosis

1. Check for continuity between terminal 5 of the data link connector and body ground.
2. Is there continuity?

NO	▸ Repair an open in the wire between terminal 5 of the data link connector and ground point.

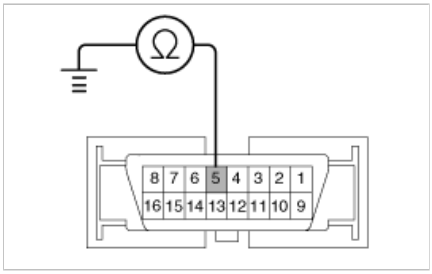

Communication with Scan Tool is not possible.
(Communication with ABS only is not possible)

Detecting condition

Trouble Symptoms	Possible Cause
When communication with Hi-Scan (pro) is not possible, the cause may be probably an open in the HECU power circuit or an open in the diagnosis output circuit.	- An open in the wire - Faulty HECU - Faulty power source circuit

Inspection procedures

Check for Continuity in the Diagnosis Line

1. Disconnect the connector from the ABS control module.
2. Check for continuity between terminals 7 of the ABS control module connector and 1 of the data link connector.
3. Is there continuity?

YES	▸ Check the power source of ABS control module.
NO	▸ Repair an open in the wire.

Check the power source of ABS control module

1. Disconnect the connector from the ABS control module.
2. Turn the ignition switch ON, measure the voltage between terminal 3 of the ABS control module harness side connector and body ground.

Specification : approximately B+

3. Is voltage within specification?

YES	▸ Check for poor ground.
NO	▸ Check the harness or connector between the fuse (10A) in the engine compartment junction block and the ABS control module.Repair if necessary.

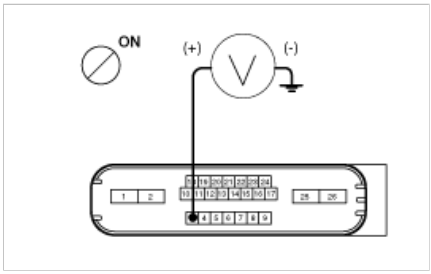

Check for poor ground

1. Check for continuity between terminal 5 of the data link connector and ground point.

YES	▸ Replace the ABS control module and recheck.
NO	▸ Repair an open in the wire or poor ground

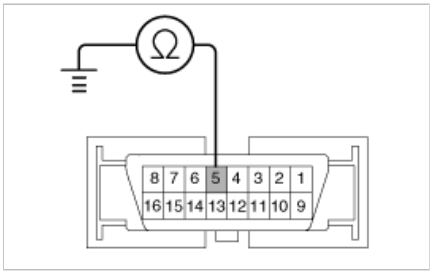

When Ignition Key Is Turned ON (engine OFF), The ABS Warning Lamp Does Not Light Up.

Detecting condition

Trouble Symptoms	Possible Cause
When current flows in the HECU the ABS warning lamp turns from ON to OFF as the initial check. Therefore if the lamp does not light up, the cause may be an open in the lamp power supply circuit, a blown bulb, an open in the both circuits between the ABS warning lamp and the HECU, and the faulty HECU.	- Faulty ABS warning lamp bulb - Blown fuse is related to ABS in the engine compartment junction block - Faulty ABS warning lamp module - Faulty HECU

Inspection procedures

Problem verification

1. Disconnect the connector from the ABS control module and turn the ignition switch ON.
2. Does the ABS warning lamp light up?

YES	▸ Inspect again after replacing the ABS HECU.
NO	▸ Check the power source for the ABS warning lamp.

Check the power source for the ABS warning lamp

1. Disconnect the instrument cluster connector (M11-B) and turn the ignition switch ON.
2. Measure the voltage between terminal (M11-B) 14 of the cluster harness side connector and body ground.

Specification : approximately B+

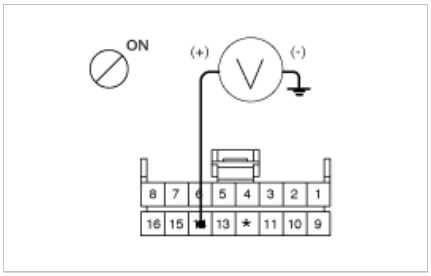

3. Is voltage within specification?

YES	▸ Check the CAN circuit resistance for ABS warning lamp.
NO	▸ Check for blown fuse.

Check the can circuit resistance for ABS warning lamp

1. Disconnect the instrument cluster connector (M11-B) and turn the ignition switch OFF.
2. Measure the resistance between terminal (M11-B) 9 and 10 of the cluster harness side connector.

Specification : 60Ω

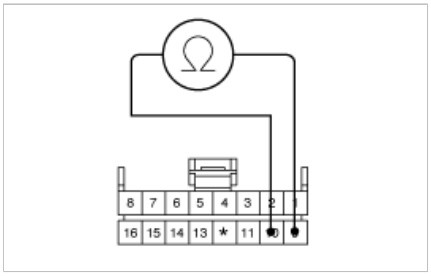

3. Is resistance within specification?

YES	▸ Repair ABS warning lamp bulb or instrument cluster assembly.
NO	▸ Check the CAN circuit wiring for ABS warning lamp.

Check the can circuit wiring for ABS warning lamp

1. Disconnect the instrument cluster connector (M11-B) and ABS HECU connector, and then turn the ignition switch OFF.
2. Check for continuity between terminal (M11-B) 9 of the cluster harness side connector and terminal 6 of ABS HECU harness side.
   Check for continuity between terminal (M11-B) 10 of the cluster harness side connector and terminal 13 of ABS HECU harness side.

Specification : Below 1Ω

3. Is resistance within specification?

YES	▸ Repair short of wiring between terminal 6, 13 of ABS HECU harness connector and ABS warning lamp module.
NO	▸ Repair open of wiring between terminal 6, 13 of ABS HECU harness connector and ABS warning lamp module.

Even After The Engine Is Started, The ABS Warning Lamp Remains ON.

Detecting condition

Trouble Symptoms	Possible Cause
If the HECU detects trouble, it lights the ABS warning lamp while at the same time prohibiting ABS control. At this time, the HECU records a DTC in memory. Even though the normal code is output, the ABS warning lamp remains ON, then the cause may be probably an open or short in the ABS warning lamp circuit.	- An open in the wire - Faulty instrument cluster assembly - Faulty ABS warning lamp module - Faulty HECU

Inspection procedures

Check DTC Output

1. Connect the scan tool to the 16P data link connector located behind the driver's side kick panel.
2. Check the DTC output using scan tool.
3. Is DTC output?

YES	▸ Perform the DTC troubleshooting procedure (Refer to DTC troubleshooting).
NO	▸ Check the CAN circuit resistance for ABS warning lamp.

Check the can circuit resistance for ABS warning lamp

1. Disconnect the instrument cluster connector (M11-B) and turn the ignition switch OFF.
2. Measure the resistance between terminal (M11-B) 9 and 10 of the cluster harness side connector.

Specification : 60Ω

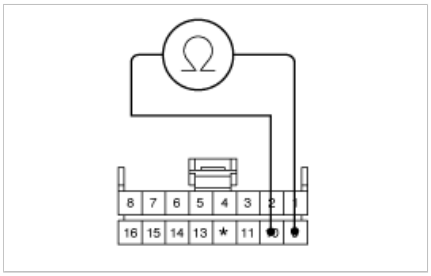

3. Is resistance within specification?

YES	▸ Repair ABS warning lamp bulb or instrument cluster assembly.
NO	▸ Check the CAN circuit wiring for ABS warning lamp.

Check the can circuit wiring for ABS warning lamp

1. Disconnect the instrument cluster connector (M11-B) and ABS HECU connector, and then turn the ignition switch OFF.
2. Check for continuity between terminal (M11-B) 9 of the cluster harness side connector and terminal 6 of ABS HECU harness side.
   Check for continuity between terminal (M11-B) 10 of the cluster harness side connector and terminal 13 of ABS HECU harness side.

   Specification : Below 1Ω

3. Is there continuity?

YES	▸ Repair short of wiring between terminal 6, 13 of ABS HECU harness connector and ABS warning lamp module.If no trouble in wiring, inspect again after replacing the ABS HECU.
NO	▸ Repair short of wiring between terminal 6, 13 of ABS HECU harness connector and ABS warning lamp module.If no trouble in wiring, inspect again after replacing the ABS HECU.

Bleeding of Brake System

This procedure should be followed to ensure adequate bleeding of air and filling of the ABS unit, brake lines and master cylinder with brake fluid.

1. Remove the reservoir cap and fill the brake reservoir with brake fluid.

   CAUTION

   If there is any brake fluid on any painted surface, wash it off immediately.

   NOTE

   When pressure bleeding, do not depress the brake pedal.
   Recommended fluid..... DOT3 or DOT4

2. Disconnect the vacuum switch connector.
   (2.0 AT & ESC Only)
3. Connect a clear plastic tube to the wheel cylinder bleeder plug and insert the other end of the tube into a half filled clear plastic bottle.
4. Connect the scantool to the data link connector located underneath the dash panel.
5. Select and operate according to the instructions on the scantool screen.

   CAUTION

   You must obey the maximum operating time of the ABS motor with the scantool to prevent the motor pump from burning.

   (1) Select vehicle name.

   (2) Select Anti-Lock Brake system.

   (3) Select HCU air bleeding mode.

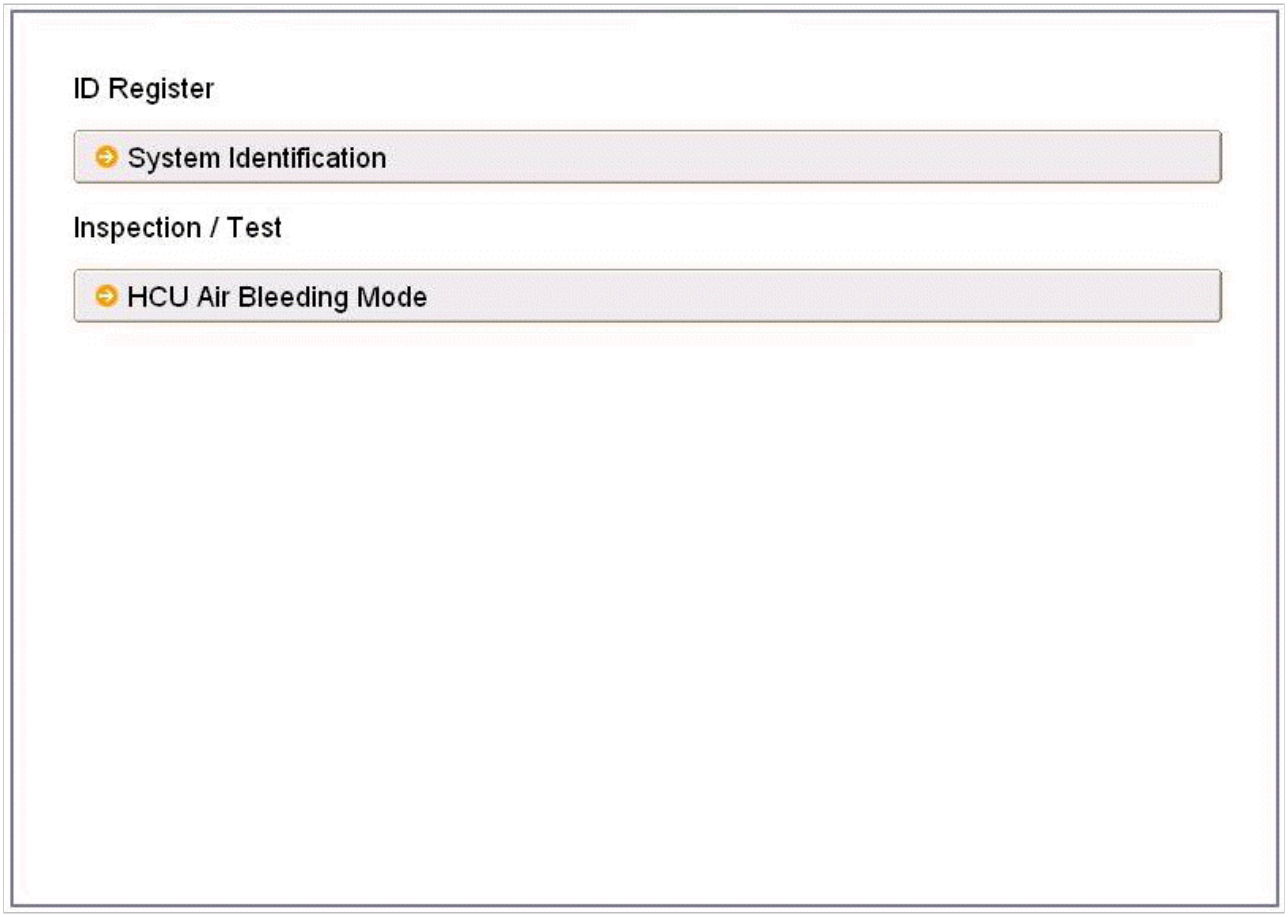

(4) Press "OK" to operate motor pump and solenoid valve.

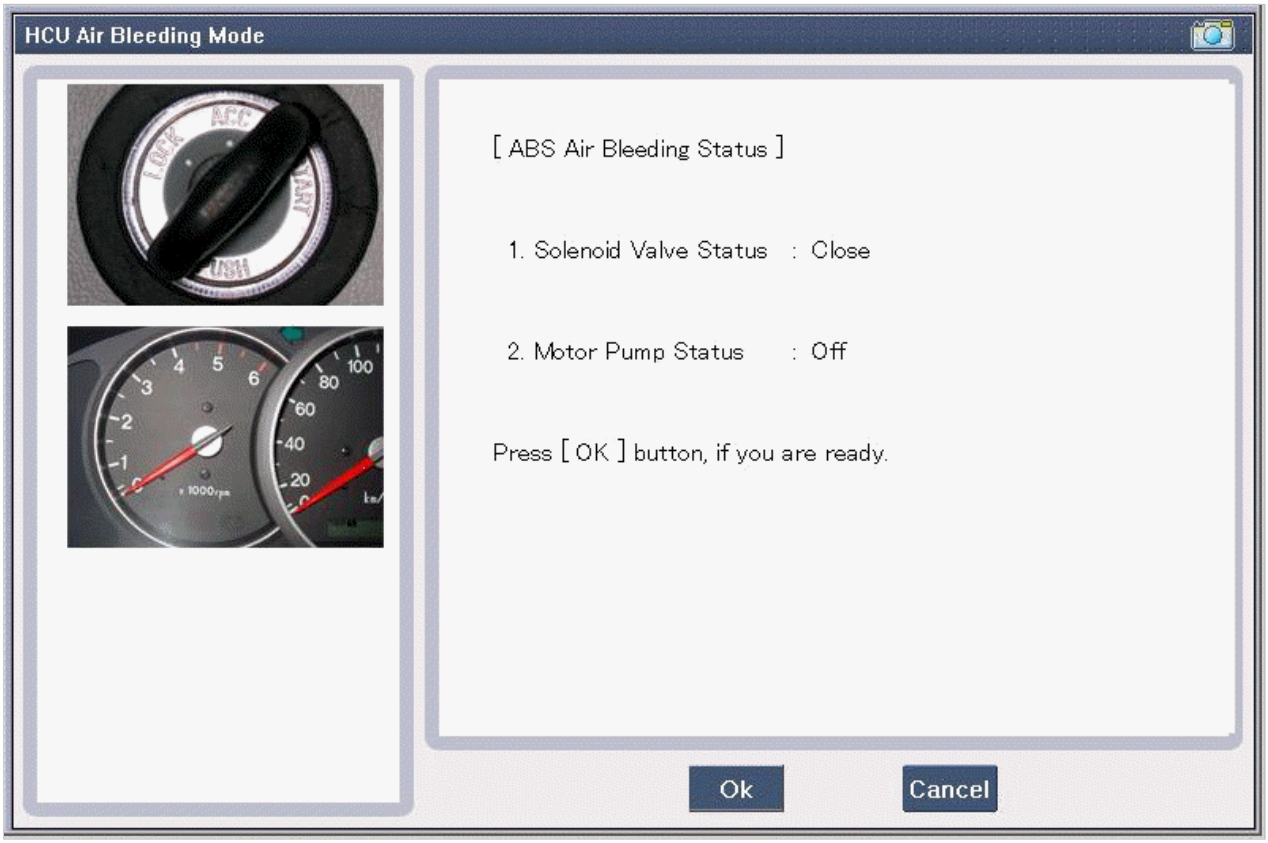

(5) Wait 60 sec. before operating the air bleeding. (If not, you may damage the motor.)

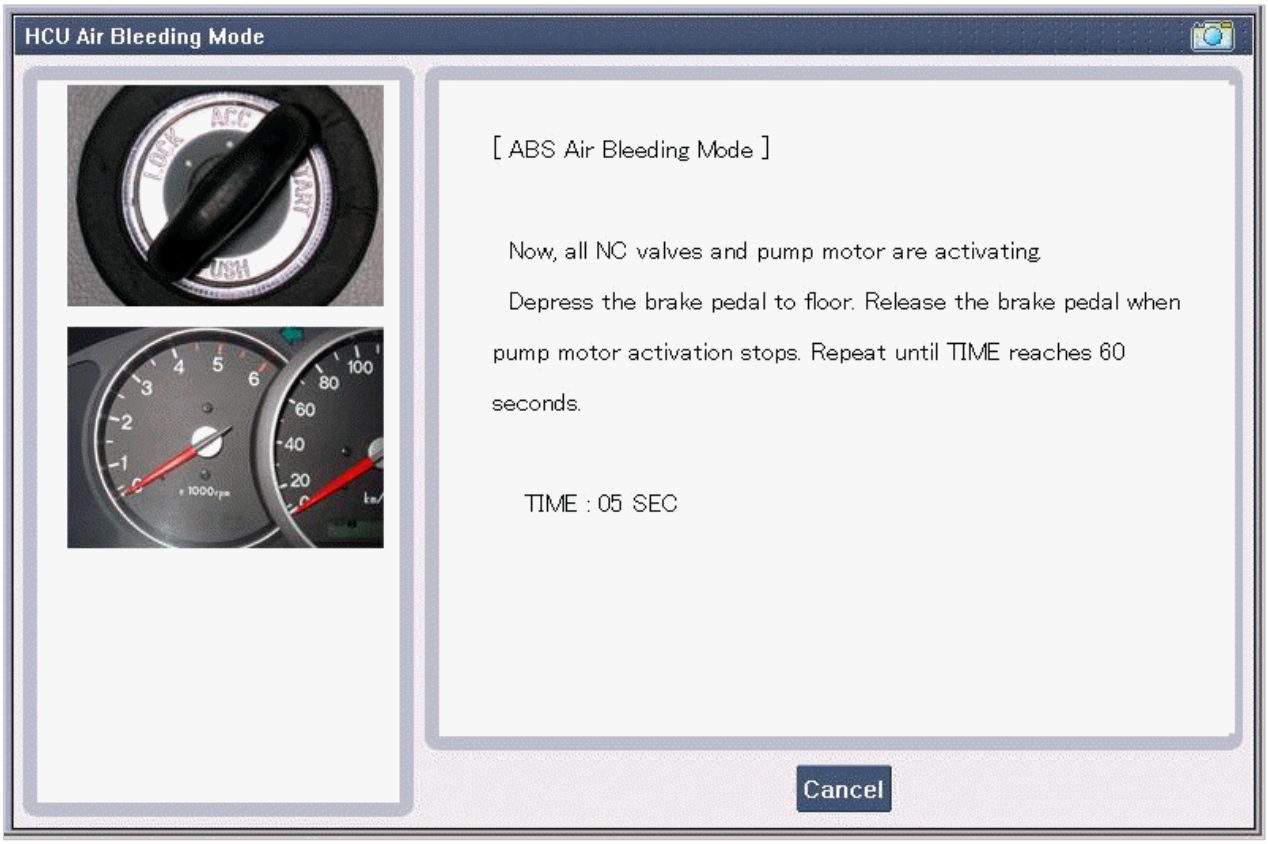

(6) Perform the air bleeding.

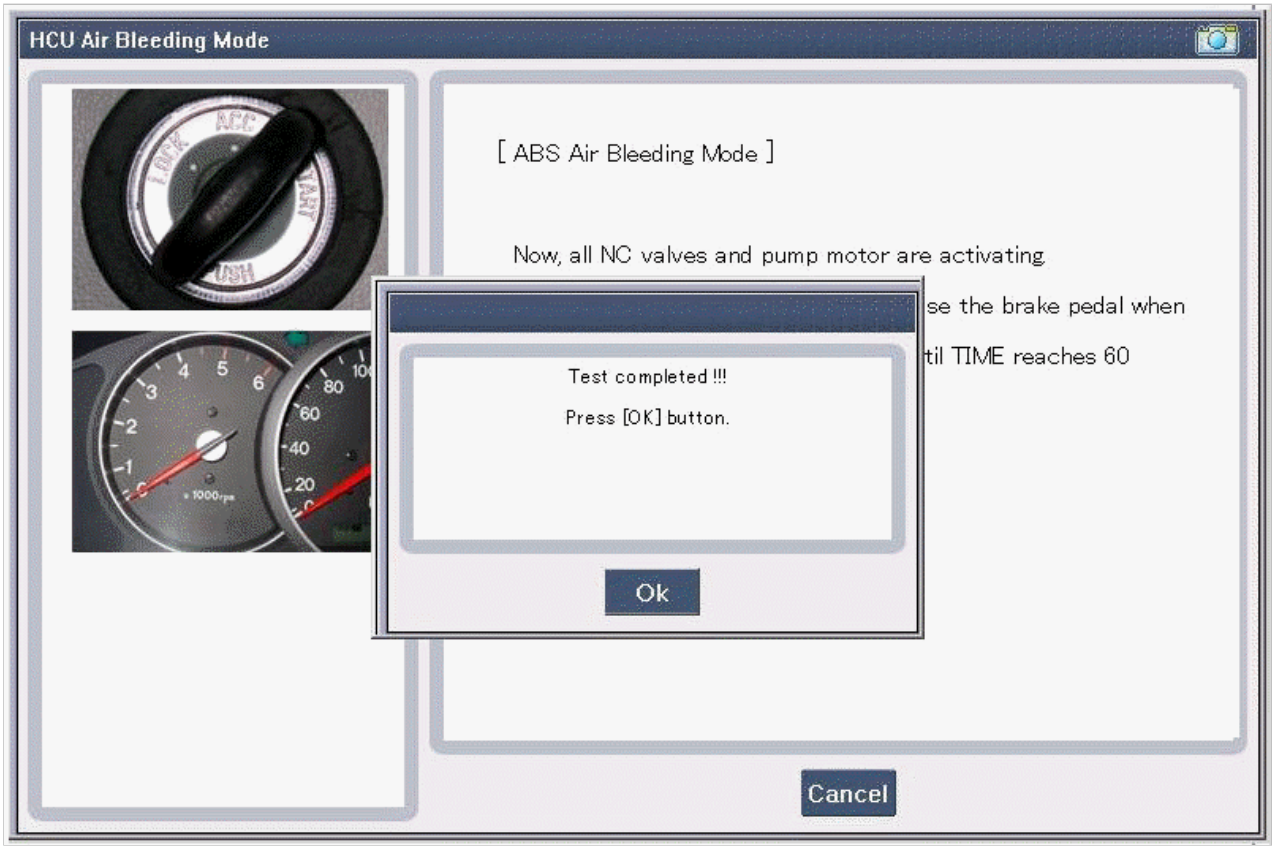

6. Pump the brake pedal several times, and then loosen the bleeder screw until fluid starts to run out without bubbles. Then close the bleeder screw.

Front

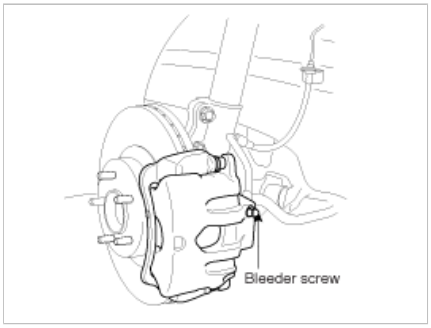

Rear

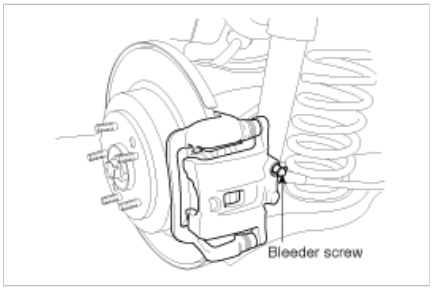

7. Repeat step 5 until there are no more bubbles in the fluid for each wheel.

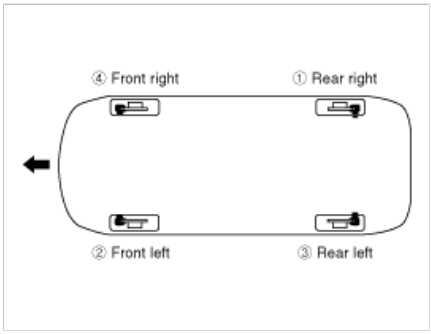

8. Tighten the bleeder screw.

Bleed screw tightening torque:
6.9 ~ 12.7N.m (0.7 ~ 2.0kgf.m, 5.1 ~ 9.5lb-ft)

9. Connect the vacuum switch connector.
(2.0 AT & ESC Only)

ABS Diagnostic Trouble Code(DTC) chart

● : MIL ON ○ : MIL OFF

DTC CODE	Trouble description	Warning lamp condition		Remark
		EBD	ABS	
C1101	Battery Voltage High	●	●	
C1102	Battery Voltage Low	○/●	●	
C1200	Wheel Speed Sensor Front-LH Open/Short	○/●	●	
C1201	Wheel Speed Sensor Front-LH Range / Performance / Intermittent	○/●	●	
C1202	Wheel Speed Sensor Front-LH Invalid/no Signal	○/●	●	
C1203	Wheel Speed Sensor Front-RH Open/Short	○/●	●	
C1204	Wheel Speed Sensor Front-RH Range / Performance / Intermittent	○/●	●	
C1205	Wheel Speed Sensor Front-RH Invalid/no Signal	○/●	●	
C1206	Wheel Speed Sensor Rear-LH Open/Short	○/●	●	
C1207	Wheel Speed Sensor Rear-LH Range / Performance / Intermittent	○/●	●	
C1208	Wheel Speed Sensor Rear-LH Invalid/no Signal	○/●	●	
C1209	Wheel Speed Sensor Rear-RH Open/Short	○/●	●	

C1210	Wheel Speed Sensor Rear-RH Range / Performance / Intermittent	○/●	●	
C1211	Wheel Speed Sensor Rear-RH Invalid/no Signal	○/●	●	
C1604	ECU Hardware Error	●	●	
C2112	Valve Relay Error	●	●	
C2380	ABS/TCS/ESC valve error	●	●	
C2402	Motor Failure	○	●	

Components

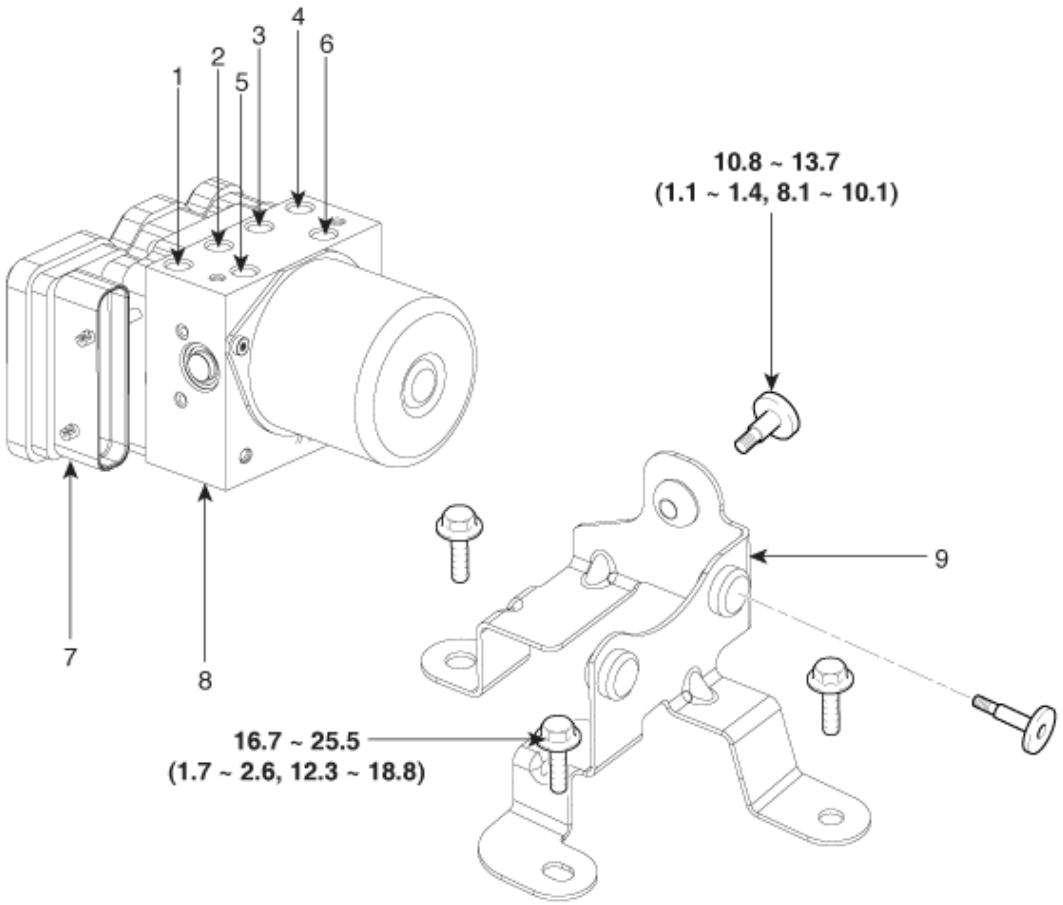

Torque : N.m (kgf.m, lb-ft)

1. Front-left tube	6. MC1
2. Rear -right tube	7. ABS control module connector (B)
3. Rear-left tube	8. ABS control module (ECU)
4. Front-right tube	9. Bracket
5. MC2	

Removal

1. Turn the ignition switch OFF and disconnect the negative (-) battery cable.
2. Remove the engine room junction box and bracket.

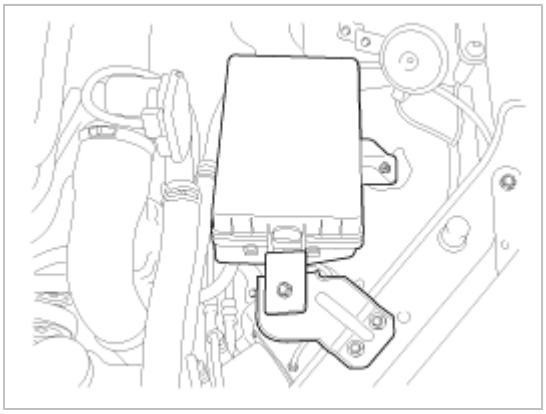

3. Disconnect the brake tubes from the HECU by unlocking the nuts counterclockwise with a spanner.

Tightening torque:
ABS : 12.7 ~ 16.7N.m(1.3 ~ 1.7kgf.m, 9.4 ~ 12.3lb-ft)
ESC : 18.6 ~ 22.6N.m(1.9 ~ 2.3kgf.m, 13.7 ~ 16.6lb-ft)

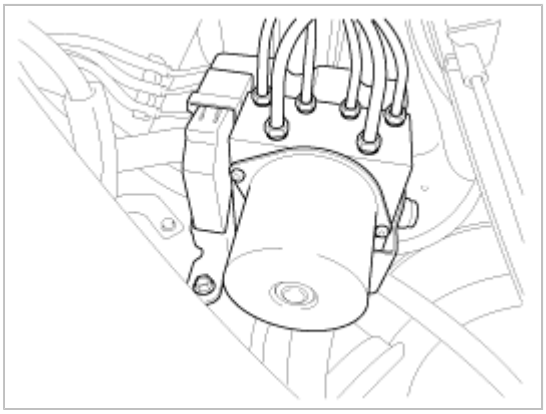

4. Pull up the lock of the ABS control unit connector, then disconnect the connector.
5. Loosen the ABS HECU bracket bolt(3EA), then remove HECU and bracket.

Tightening torque:
16.7 ~ 25.5N.m (1.7 ~ 2.6kgf.m, 12.3 ~ 18.8lb-ft)

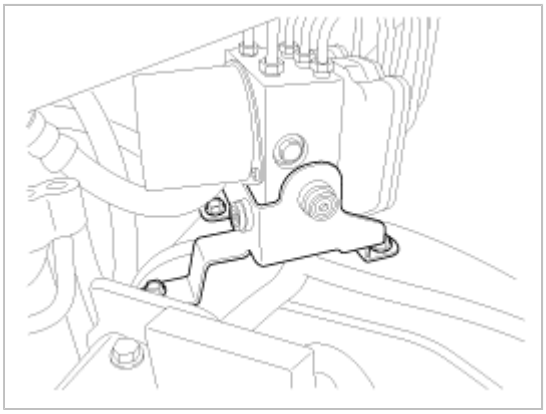

CAUTION

1. Never attempt to disassemble the HECU.
2. The HECU must be transported and stored in.
3. Never shock to the HECU.

6. Remove the 3 bolts, then remove the bracket from HECU.

Tightening torque:
10.8 ~ 13.7N.m (1.1 ~ 1.4kgf.m, 8.0 ~ 10.1lb-ft)

Installation

1. Installation is the reverse of removal.
2. Tighten the HECU mounting bolts and nuts to the specified torque.

Components

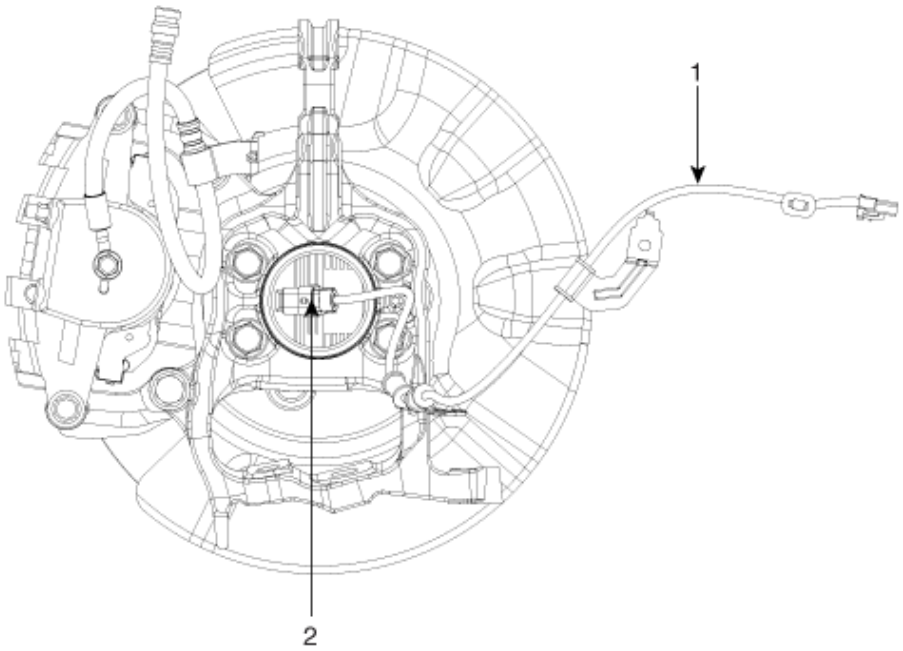

1. Front wheel speed sensor cable
2. Front wheel speed sensor

Removal

1. Remove the connector after removing the front wheel speed sensor clip.

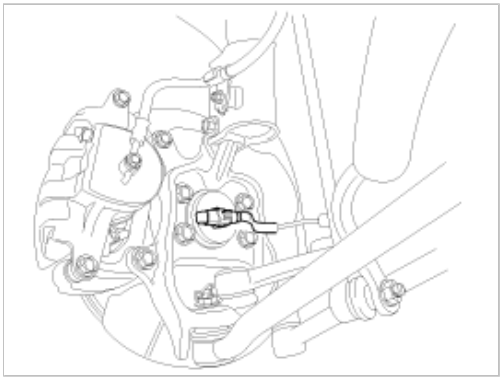

2. Remove the front wheel speed sensor. (Refer to Driveshaft and axle group - Front axle assembly)
3. Installation is the reverse of removal.

Inspection

1. Measure the output voltage between the terminal of the wheel speed sensor and the body ground.

> **CAUTION**
>
> In order to protect the wheel speed sensor, when measuring output voltage, a 100 Ω resister must be used as shown.

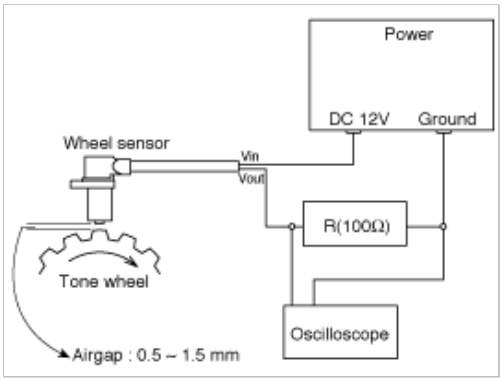

2. Compare the change of the output voltage of the wheel speed sensor to the normal change of the output voltage as shown below.

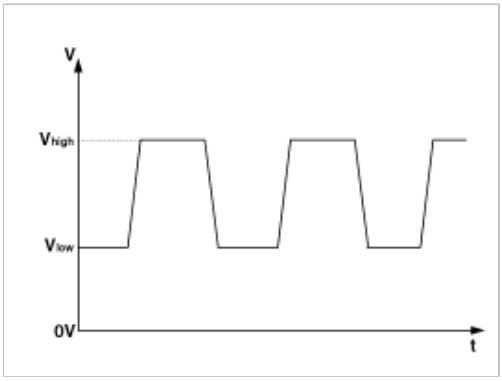

V_low : 0.59V ~ 0.84V
V_high : 1.18V ~ 1.68V
Frequency range : 1 ~ 2,500Hz

Components

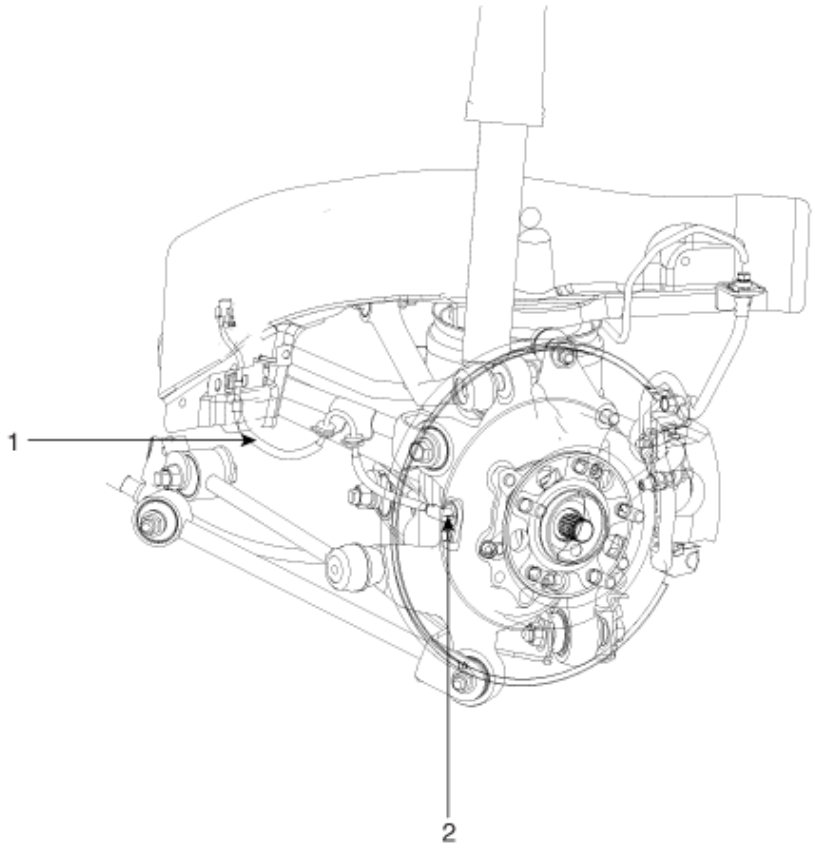

1. Rear wheel speed sensor cable
2. Rear wheel speed sensor

Removal

1. Remove the rear wheel speed sensor mounting bolt (A).

Tightening torque:
69~98 Nm (7~11 kgf.m, 51~80 lb-ft)

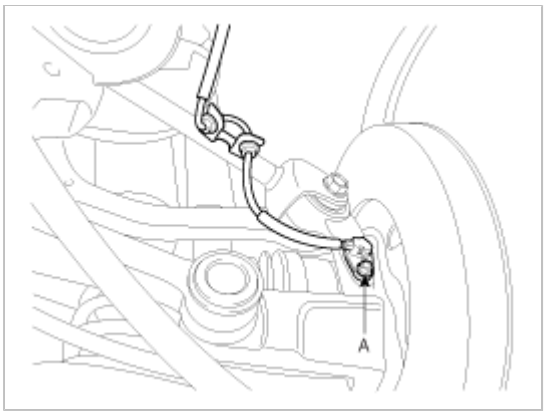

2. Remove the rear wheel guard.
3. Disconnect the rear wheel speed sensor connector (A). And remove the rear wheel speed sensor.
4. Installation is the reverse of removal.

Inspection

1. Measure the output voltage between the terminal of the wheel speed sensor and the body ground.

> **CAUTION**
>
> In order to protect the wheel speed sensor, when measuring output voltage, a 100 Ω resister must be used as shown.

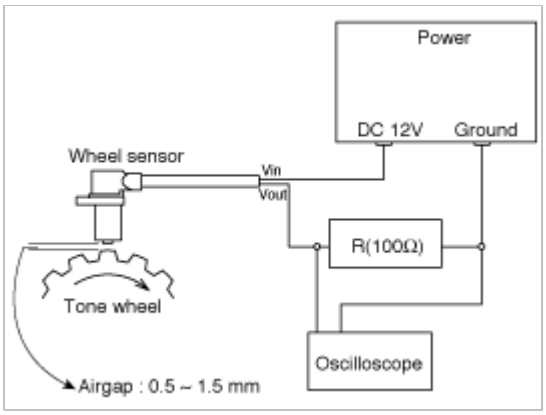

2. Compare the change of the output voltage of the wheel speed sensor to the normal change of the output voltage as shown below.

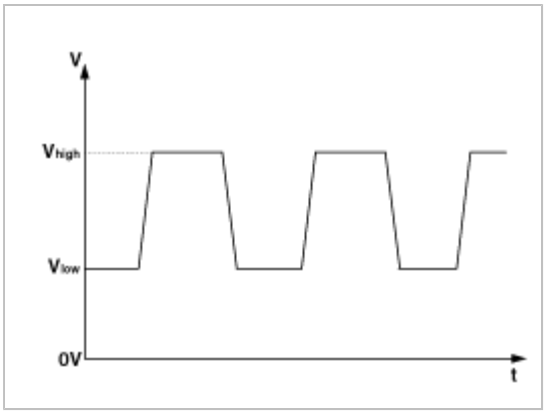

Low : 0.5V
High : 1.5V
Frequency range : 1-2Hz

EBD(Electronic brake-force distribution) Operation

The EBD system (Electronic Brake force Distribution) as a sub-system of the ABS system is to control the effective adhesion utilization by the rear wheels.
It further utilizes the efficiency of highly developed ABS equipment by controlling the slip of the rear wheels in the partial braking range.
The brake force is moved even closer to the optimum and controlled electronically, thus dispensing with the need for the proportioning valve.
The proportioning valve, because of a mechanical device, has limitations to achieve an ideal brake force distribution tothe rear wheels as well as to carry out the flexible brake force distribution proportioning to the vehicle load or weight increasing.
And in the event of malfunctioning, driver cannot notice whether it fails or not.
EBD controlled by the ABS Control Module, calculates the slip ratio of each wheel at all times and controls the brake pressure of the rear wheels not to exceed that of the front wheels.
If the EBD fails, the EBD warning lamp (Parking brake lamp) lights up.

Advantages

- Function improvement of the base-brake system.
- Compensation for the different friction coefficients.
- Elimination of the proportioning valve.
- Failure recognition by the warning lamp.

Comparison between proportioning valve and EBD

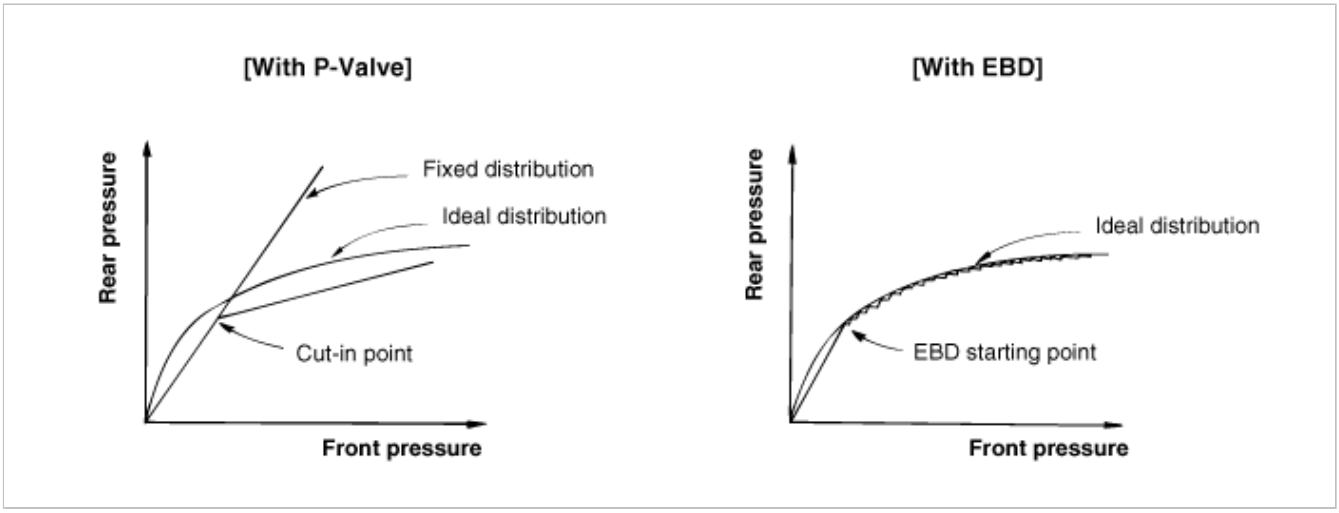

Components

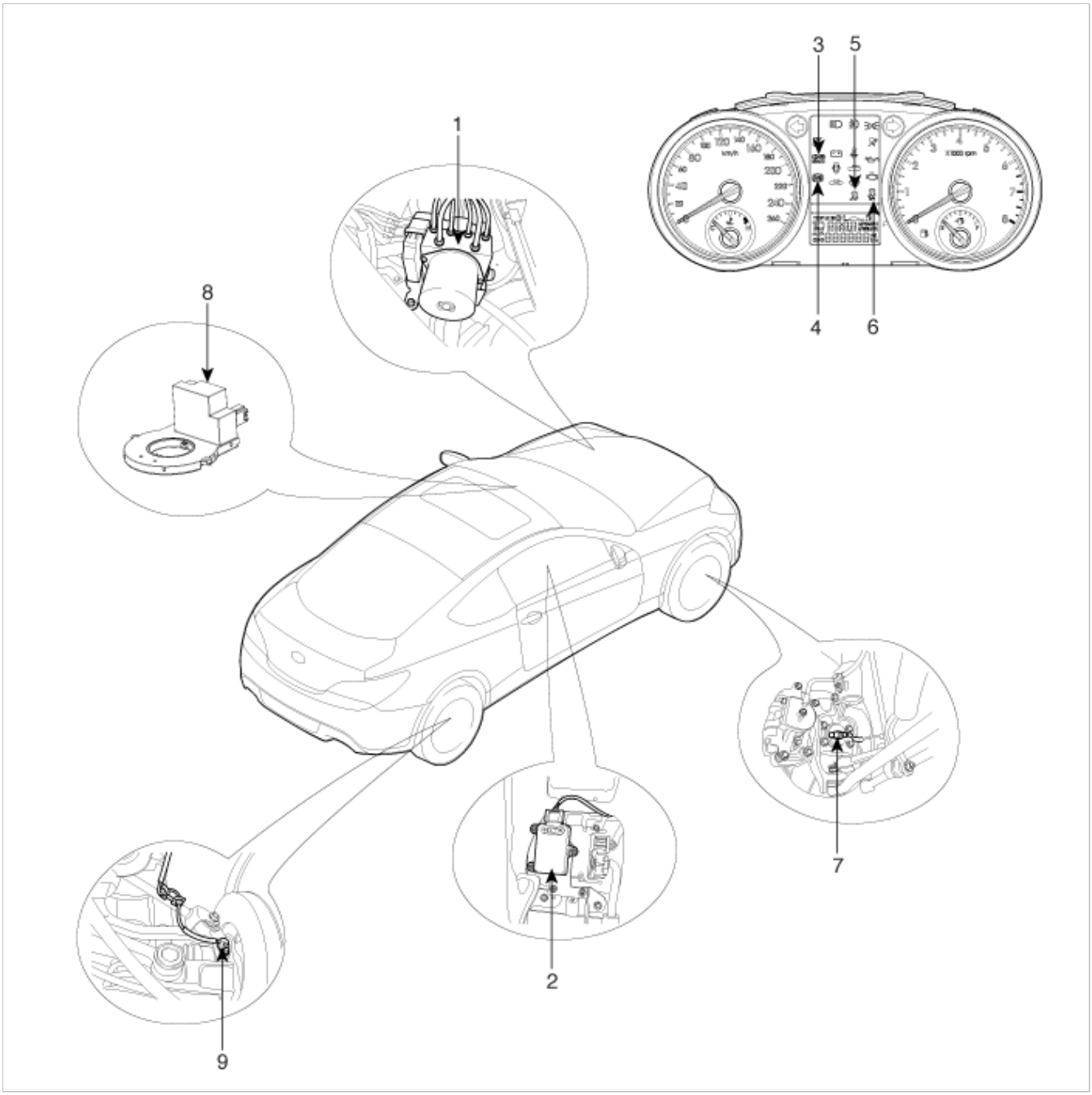

1. HECU module	6. ESC OFF warning lamp
2. Yaw rate & Lateral G sensor	7. Front wheel speed sensor
3. Parking brake/EBD warning lamp	8. Steering angle sensor
4. ABS warning lamp	9. Rear wheel speed sensor
5. ESC function / warning lamp	

Description of ESC

Optimum driving safety now has a name : ESC, the Electronic Stability Control.
ESC recognizes critical driving conditions, such as panic reactions in dangerous situations, and stabilizes the vehicle by wheel-individual braking and engine control intervention.
ESC adds a further function known as Active Yaw Control (AYC) to the ABS, TCS, EBD and EDC functions. Whereas the ABS/TCS function controls wheel slip during braking and acceleration and, thus, mainly intervenes in the longitudinal dynamics of the vehicle, active yaw control stabilizes the vehicle about its vertical axis.
This is achieved by wheel individual brake intervention and adaptation of the momentary engine torque with no need for any action to be taken by the driver.
ESC essentially consists of three assemblies : the sensors, the electronic control unit and the actuators.
The stability control feature works under all driving and operating conditions. Under certain driving conditions, the ABS/TCS function can be activated simultaneously with the ESC function in response to a command by the driver.
In the event of a failure of the stability control function, the basic safety function, ABS, is still maintained.

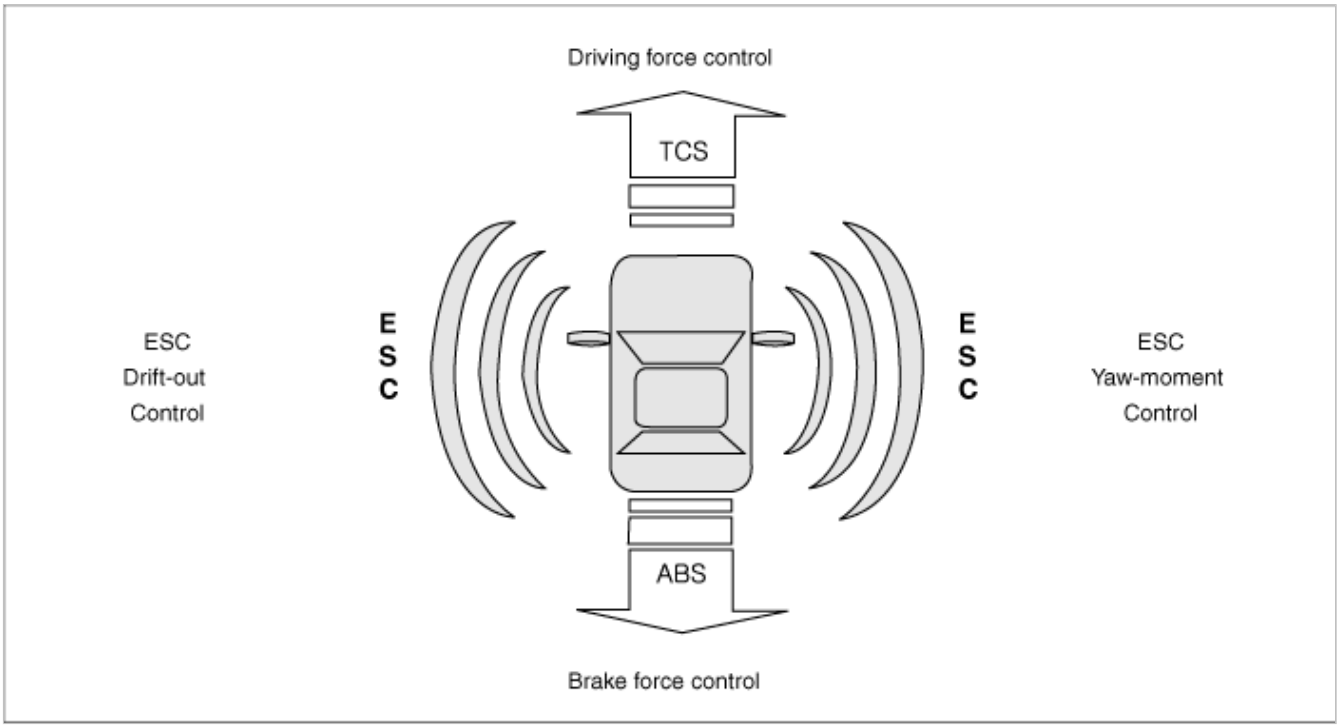

Description of ESC control

ESC system includes ABS/EBD, TCS and AYC function.
ABS/EBD function : The ECU changes the active sensor signal (current shift) coming from the four wheel sensors to the square wave.By using the input of above signals, the ECU calculates the vehicle speed and the acceleration & deceleration of the four wheels.And, the ECU judges whether the ABS/EBD should be actuated or not.
TCS function prevents the wheel slip of drive direction by adding the brake pressure and engine torque reduction via CAN communication.TCS function uses the wheel speed sensor signal to determine the wheel slip as far as ABS function.
AYC function prevents unstable maneuver of the vehicle. To determine the vehicle maneuver, AYC function uses the maneuver sensor signals(Yaw Rate Sensor, Lateral Acceleration Sensor, Steering Wheel Angle Sensor).If vehicle maneuver is unstable (Over Steer or Under Steer), AYC function applies the brake pressure on certain wheel, and send engine torque reduction signal by CAN.
After the key-on, the ECU continually diagnoses the system failure. (self-diagnosis)If the system failure is detected, the ECU informs driver of the system failure through the BRAKE/ABS/ESC warning lamp. (fail-safe warning)

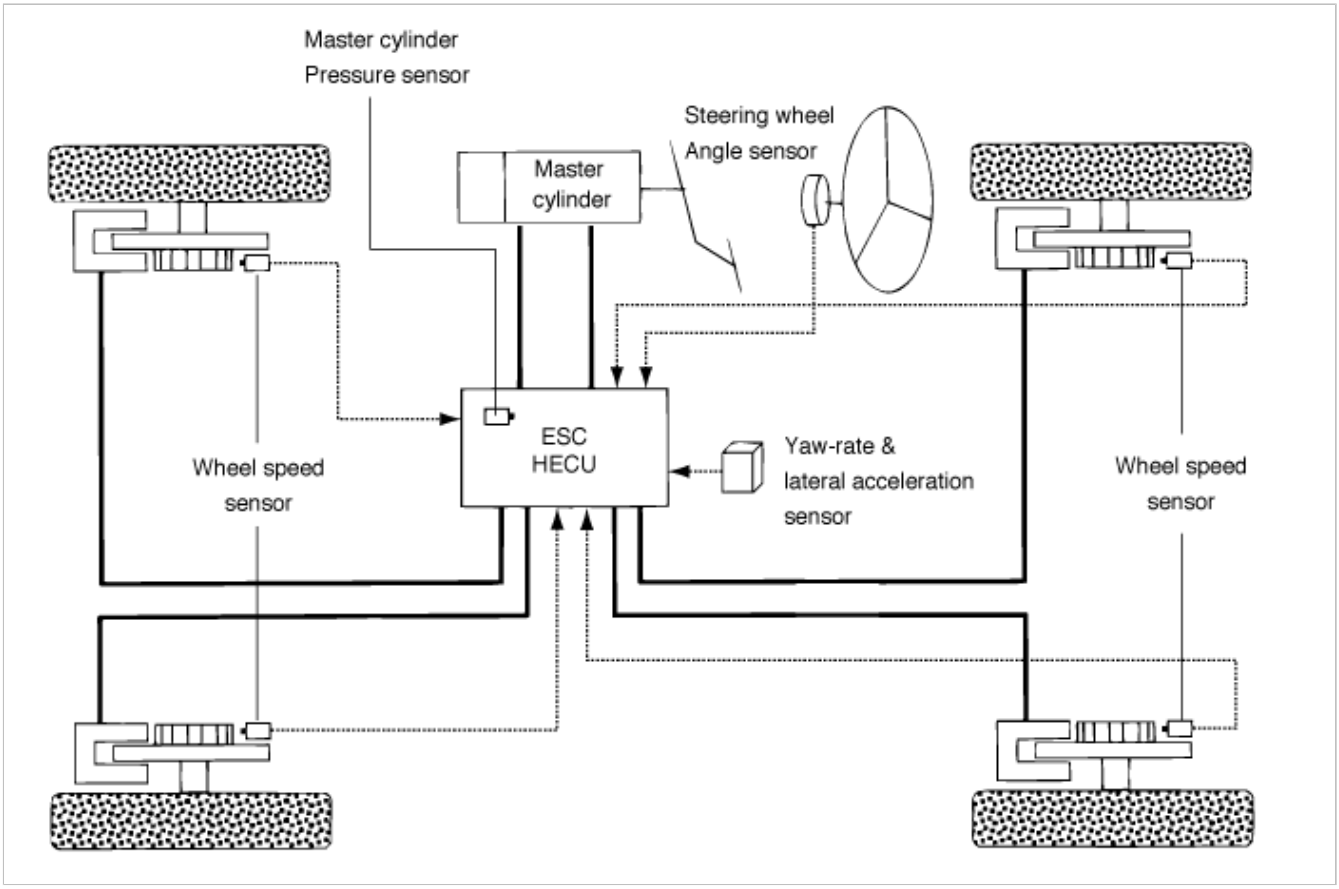

Inputand output diagram

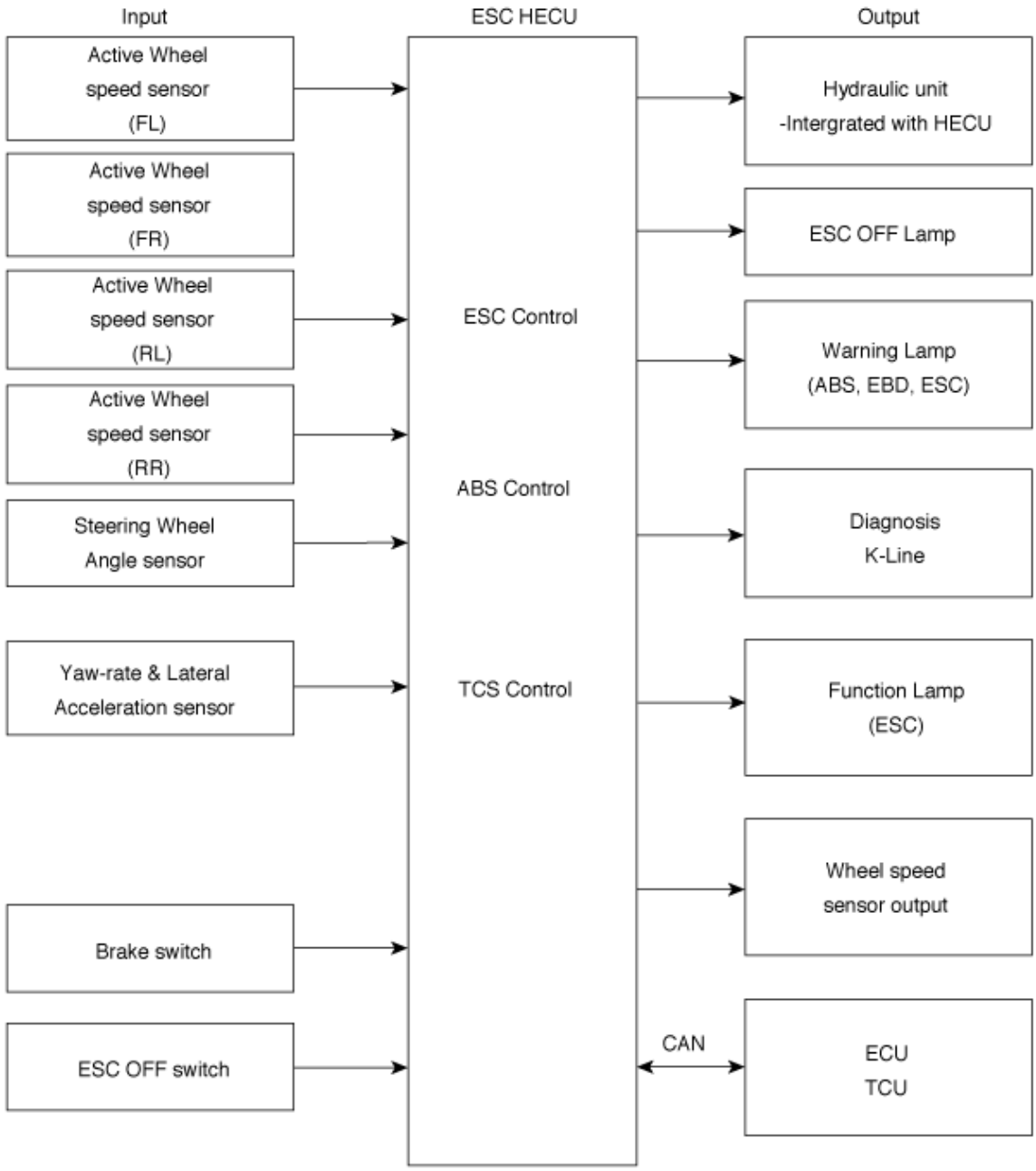

ESC Operation mode

ESC Hydraulic system diagram

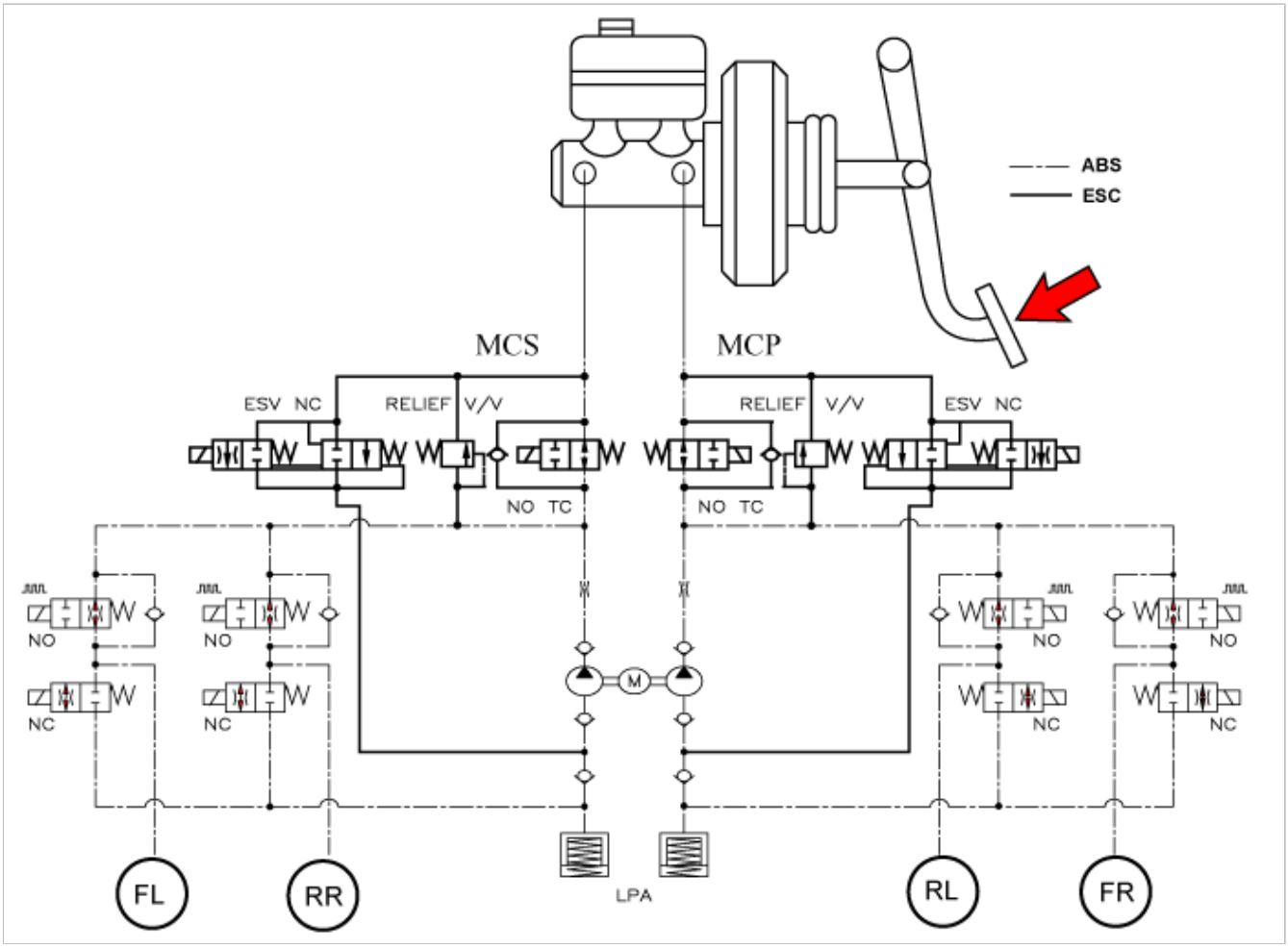

1. ESC Non-operation : Normal braking.

Solenoid valve	Continuity	Valve	Motor pump	TC Valve
IN (NO)	OFF	OPEN	OFF	OFF
OUT (NC)	OFF	CLOSE		

2. ESC operation

Solenoid valve		Continuity	Valve	Motor pump	TC Valve
Understeering (Only inside of rear wheel)	IN(NO)	OFF	OPEN	ON	ON
	OUT(NC)	OFF	CLOSE		
Oversteering (Only outside of front wheel)	IN(NO)	OFF	OPEN		
	OUT(NC)	OFF	CLOSE		

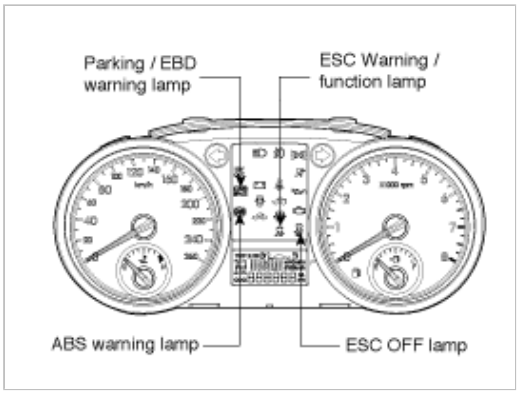

ABS Warning lamp module

The active ABS warning lamp module indicates the self-test and failure status of the ABS. The ABS warning lamp shall be on:

- During the initialization phase after IGN ON. (continuously 3 seconds).
- In the event of inhibition of ABS functions by failure.
- During diagnostic mode.
- When the ECU Connector is seperated from ECU.

EBD/Parking brake warning lamp module

The active EBD warning lamp module indicates the self-test and failure status of the EBD. However, in case the Parking Brake Switch is turned on, the EBD warning lamp is always turned on regardless of EBD functions. The EBD warning lamp shallbe on:

- During the initialization phase after IGN ON. (continuously 3 seconds).
- When the Parking Brake Switch is ON or brake fluid level is low.
- When the EBD function is out of order .
- During diagnostic mode.
- When the ECU Connector is seperated from ECU.

ESC Warning lamp (ESC system)

The ESC warning lamp indicates the self-test and failure status of the ESC.
The ESC warning lamp is turned on under the following conditions :

- During the initialization phase after IGN ON. (continuously 3 seconds).
- In the event of inhibition of ESC functions by failure.
- When driver trun off the ESC function by on/off switch.
- During diagnostic mode.

ESC Function lamp (ESC system)

The ESC function lamp indicates the self-test and operating status of the ESC.
The ESC Function lamp operates under the following conditions :

- During the initialization phase after IGN ON. (continuously 3 seconds).
- When the ESC control is operating. (Blinking - 2Hz)

ESC On/Off switch (ESC system)

The ESC On/Off Switch shall be used to toggle the ESC function between On/Off states based upon driver input.
The On/Off switch shall be a normally open, momentary contact switch.Closed contacts switch the circuit to ignition.
Initial status of the ESC function is on and switch toggle the state.

Circuit Diagram - ESC(1)

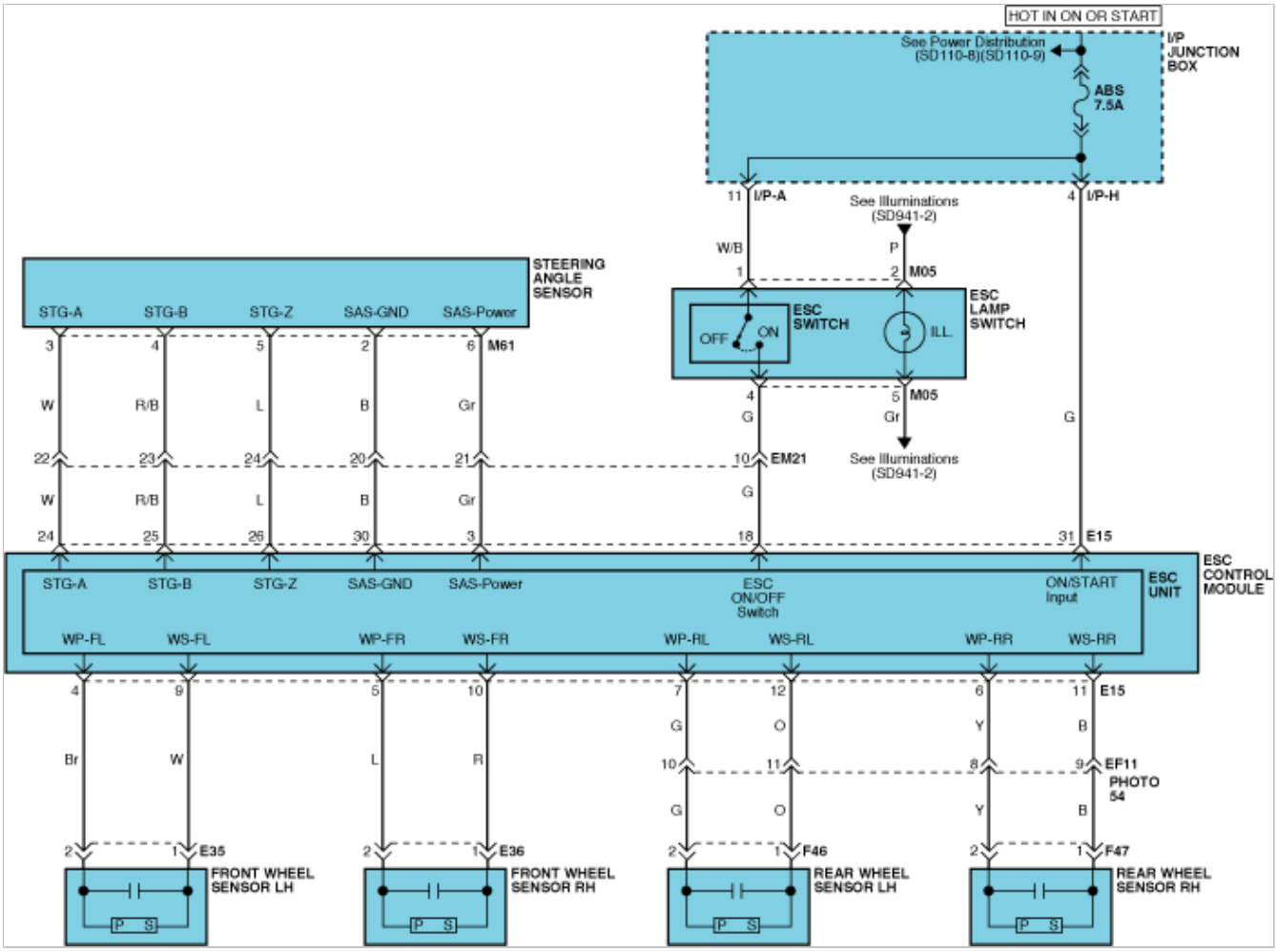

Circuit Diagram - ESC(2)

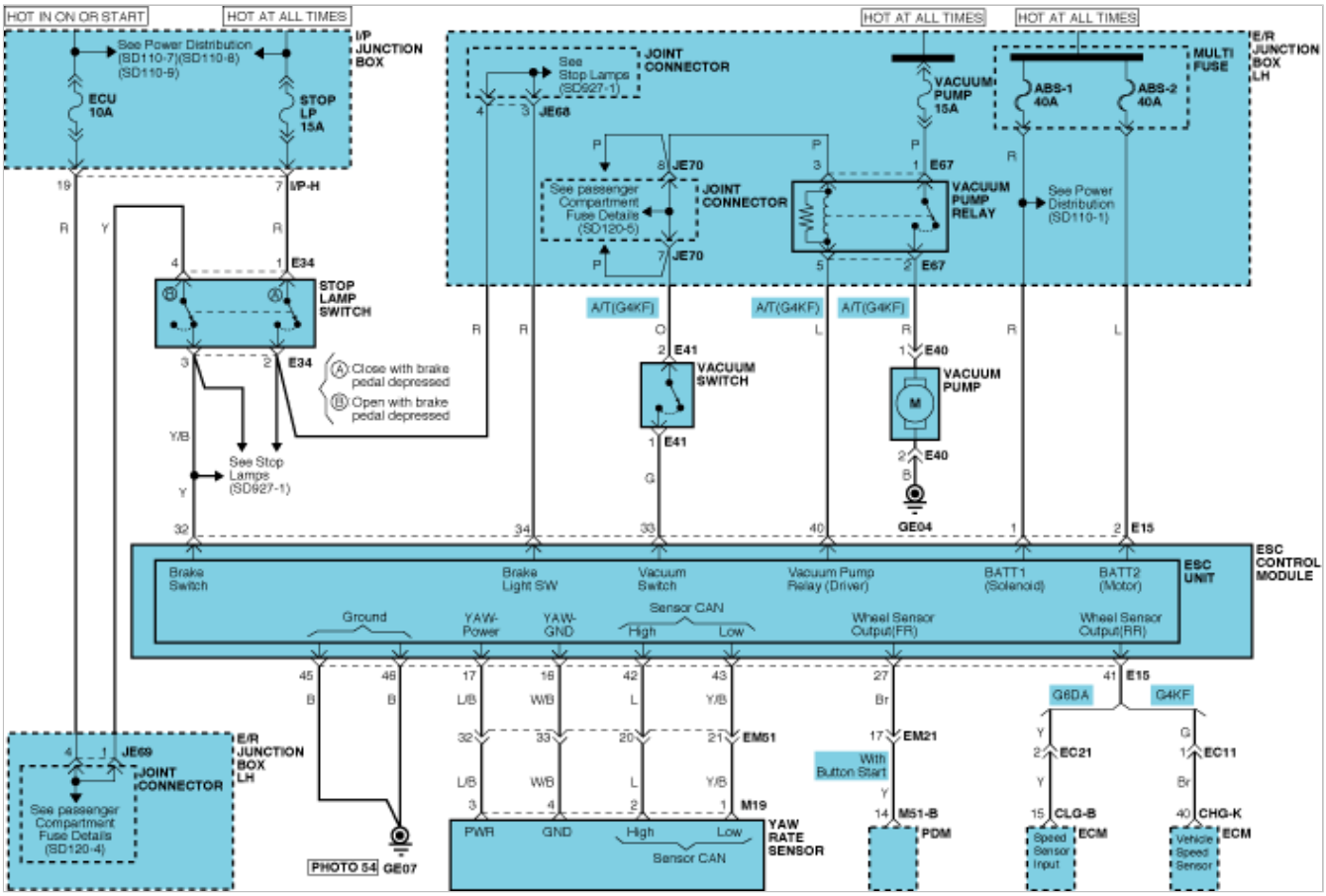

Circuit Diagram - ESC(3)

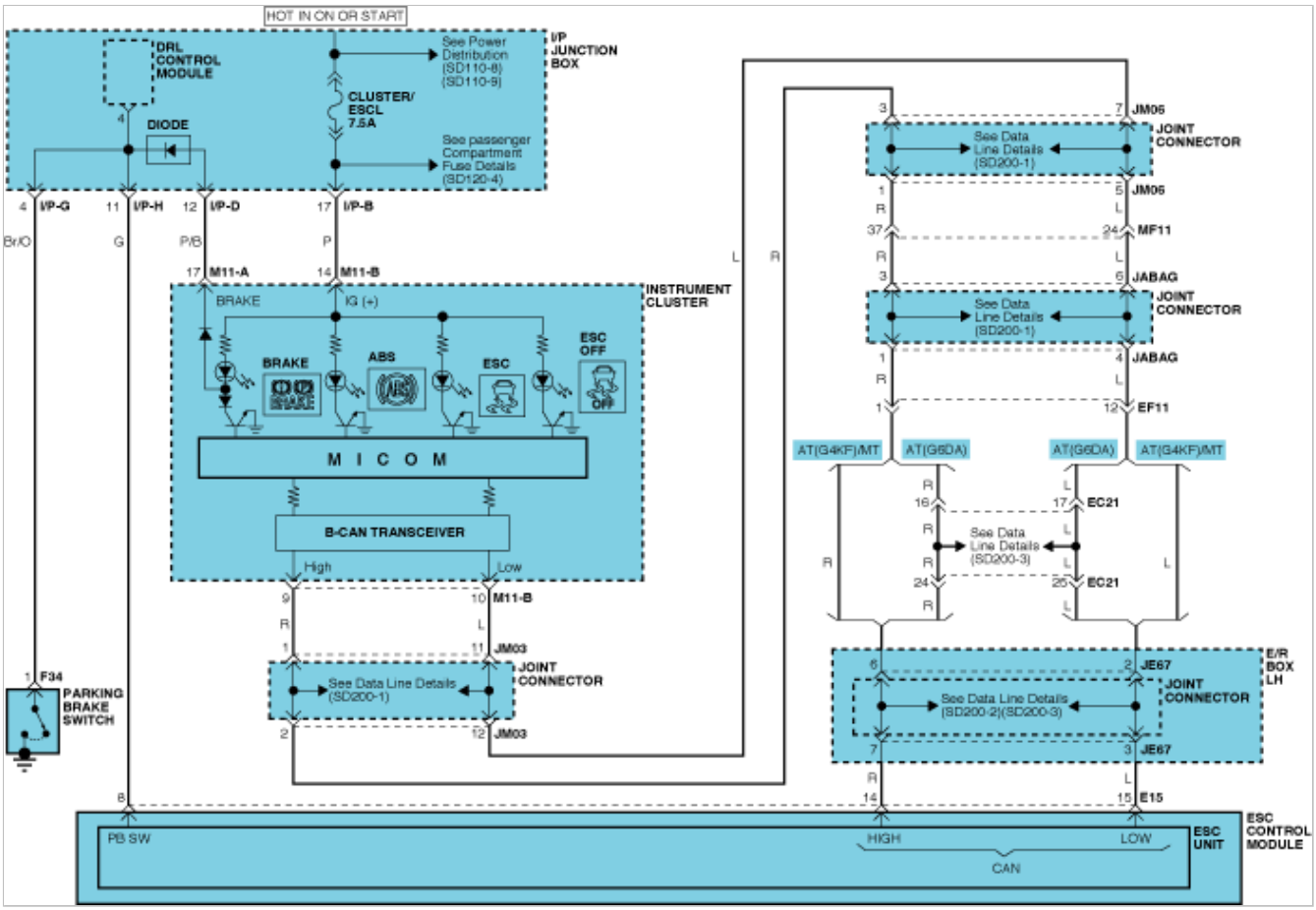

ESC Connector Input/Output

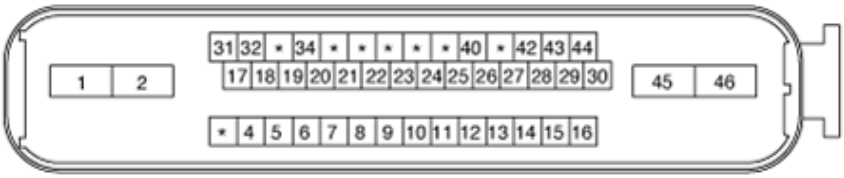

Connector Terminal		Specification	Remark
No	Description		
31	IGNITION1(+)	Over voltage range : 17 ± 0.5V Operating voltage range : 9.5 ± 0.5V < V < 17 ± 0.5V Low voltage range : 7.0 ± 0.5V < V < 9.5 ± 0.5V Max. current : I < 500mA	
1	POS.BATTERY.(SOLENOID)	Max leakage current : I < 0.8mA Operating voltage range : 9.5 ± 0.5V < V < 17 ± 0.5V Max. current : I < 40A Hardware shutdown voltage : V < 6.0V	
2	POS.BATTERY.(MOTOR)	Operating voltage range: 9.5 ± 0.5V < V < 16.5 ± 0.5V Rush current : I < 100A Max current : I < 40A Max leakage current : I < 0.2mA	
46	GROUND	Rated current : I < 500mA Max. current: I < 40A	
45	PUMP MOTOR GROUND	Rush current : I < 100A Max current : I < 40A	
16	YAW & LATERAL G SENSOR GROUND	Rated current : I <150mA	
17	YAW SENSOR POWER	Max Output current : I < 150mA Max Output voltage : V(IGN) ± 1V	
34	BRAKE LIGHT SWITCH	Input voltage (Low) : 0V ≤ V ≤ 3.0V Input voltage (High) : 7.0V ≤ V ≤ 16.0V	
32	BRAKE SWITCH		
8	PARKING BRAKE SWITCH	Input voltage (Low) : 0V ≤ V_Low ≤ 3.0V Input voltage (High) : 7.0V ≤ V_High ≤ 16.0V Max input current : I < 10mA	
27	SENSOR FRONT RIGHT OUTPUT	Max current : I < 16mA External pull up resistance :1 KΩ < R Output duty :50 ± 20%	
41	SENSOR REAR RIGHT OUTPUT		
18	ESC ON/OFF SWITCH	Input voltage (Low) : 0V ≤ V ≤ 3.0V Input voltage (High) : 7.0V ≤ V ≤ 16.0V Max input current: : I <10mA	
15	CAN BUS LINE(LOW)		
14	CAN BUS LINE(HIGH)		
4	SENSOR FRONT LEFT POWER		

5	SENSOR FRONT RIGHT POWER	Output voltage : IGN (V) ± 1V Output current : Max 30mA	
7	SENSOR REAR LEFT POWER		
6	SENSOR REAR RIGHT POWER		
9	SENSOR FRONT LEFT SIGNAL	Input current LOW : 5.9 ~ 8.4mA Input current HIGH :11.8 ~ 16.8mA Frequency range :1 ~ 2500Hz Input duty : 50 ± 20%	
10	SENSOR FRONT RIGHT SIGNAL		
12	SENSOR REAR LEFT SIGNAL		
11	SENSOR REAR RIGHT SIGNAL		
30	STEERING ANGLE SENSOR (GROUND)	Rated current : I < 100mA	
3	STEERING ANGLE SENSOR (POWER)	Max output current : I < 100mA Max output voltage : 4.75V ≤ V ≤ 5.25V	
24	STEERING ANGLE SENSOR (PHASE 1)	Input duty (ST1, ST2) : 50 ± 10% Phase difference (ST1, ST2) : 2 ± 0.6deg High voltage : 3.0V < V < 4.1V Low voltage : 1.3V < V < 2.0V	
25	STEERING ANGLE SENSOR (PHASE 2)		
26	STEERING ANGLE SENSOR (PHASE N)		
42	SENSOR CAN BUS LINE (High)		
43	SENSOR CAN BUS LINE (Low)		
33	VACUUM SWITCH	Input voltage low : 0V ≤ V ≤ 3.0V Input voltage High : 7.0V ≤ V ≤ 16.0V Max input current : I < 10mA	
40	VACUUM PUMP RELAY DRIVE	Max. current : I < 200mA Max. output low voltage : V < 0.5V	

Failure Diagnosis

1. In principle, ESC and TCS controls are prohibited in case of ABS failure.
2. When ESC or TCS fails, only the failed system control is prohibited.
3. However, when the solenoid valve relay should be turned off in case of ESC failure, refer to the ABS fail-safe.
4. Information on ABS fail-safe is identical to the fail-safe in systems where ESC is not installed.

Memory of Fail Code

1. It keeps the code as far as the backup lamp power is connected. (O)
2. It keeps the code as far as the HCU power is on. (X)

Failure Checkup

1. Initial checkup is performed immediately after the HECU power on.
2. Valve relay checkup is performed immediately after the IG2 ON.
3. It executes the checkup all the time while the IG2 power is on.

Countermeasures In Fail

1. Turn the system down and perform the following actions and wait for HECU power OFF.
2. Turn the valve relay off.
3. Stop the control during the operation and do not execute any until the normal condition recovers.

Warning Lamp ON

1. ESC operation lamp turn on for 3sec after IGN ON.
2. ESC operation lamp blinks when ESC Act.
3. ESC OFF lamp turn on in case of
   A. ESC Switch OFF
   B. ESC Failure Detect
   C. 3sec after IGN ON

ESC Diagnostic Trouble Code(DTC) chart

● : MIL ON ○ : MIL OFF

DTC CODE	Trouble description	Warning lamp condition			Remark
		EBD	ABS	ESC	
C1101	Battery Voltage High	●	●	●	
C1102	Battery Voltage Low	○/●	●	●	
C1112	Sensor Source voltage	○	○	●	ESC only
C1200	Wheel Speed Sensor Front-LH Open/Short	○/●	●	●	
C1201	Wheel Speed Sensor Front-LH Range / Performance / Intermittent	○/●	●	●	
C1202	Wheel Speed Sensor Front-LH Invalid/no Signal	○/●	●	●	
C1203	Wheel Speed Sensor Front-RH Open/Short	○/●	●	●	
C1204	Wheel Speed Sensor Front-RH Range / Performance / Intermittent	○/●	●	●	
C1205	Wheel Speed Sensor Front-RH Invalid/no Signal	○/●	●	●	

C1206	Wheel Speed Sensor Rear-LH Open/Short	○/●	●	●	
C1207	Wheel Speed Sensor Rear-LH Range / Performance / Intermittent	○/●	●	●	
C1208	Wheel Speed Sensor Rear-LH Invalid/no Signal	○/●	●	●	
C1209	Wheel Speed Sensor Rear-RH Open/Short	○/●	●	●	
C1210	Wheel Speed Sensor Rear-RH Range / Performance / Intermittent	○/●	●	●	
C1211	Wheel Speed Sensor Rear-RH Invalid/no Signal	○/●	●	●	
C1235	Primary Pressure Sensor-Electrical	○	○	●	ESC only
C1237	Primary Pressure Sensor-Signal	○	○	●	ESC only
C1259	Steering Angle Sensor – Electrical Malfunction	○	○	●	ESC only
C1260	Steering Angle Sensor Circuit-Signal	○	○	●	ESC only
C1282	Yaw Rate & Lateral G Sensor-Electrical	○	○	●	ESC only
C1283	Yaw Rate & Lateral G Sensor-Signal	○	○	●	ESC only
C1503	TCS/ESC Switch error	○	○	○	ESC only
C1513	Brake switch error	○	○	●	ESC only
C1604	ECU Hardware Error	●	●	●	
C1605	CAN Hardware error	○	○	●	ESC only
C1611	CAN Time-out ECM	○	○	●	ESC only
C1612	CAN Time-out TCM	○	○	●	ESC only
C1613	CAN Wrong Message	○	○	●	ESC only
C1616	CAN Bus off	○	○	●	ESC only
C1647	CAN Hardware Error - Sensor Channel	○	○	●	ESC only
C2112	Valve Relay Error	●	●	●	
C2126	Vacuum Pump Relay Drive Pin Open/Short	○	○	●	ESC only
C2227	Excessive Temperature Of Brake Disc	○	○	●	ESC only
C2231	Vacuum Pump System Fail	○	○	●	ESC only
C2380	ABS/TCS/ESC valve error	●	●	●	
C2402	Motor Failure	○	●	●	

General Description

The ABS ECU(Electronic Control Unit) checks the battery voltage and alternator output voltage to determine, as a safety issue, whether the ABS system can operate normally or not.
The normal battery voltage range is essential for controlling the ABS system as intended.

DTC Description

The ABS ECU monitors battery voltage and alternator output voltage.
When the voltage is higher than the expected normal value, this code is set, and the ABS/EBD/ESC functions are prohibited.
If the voltage recovers, to within normal operating ranges, then the controller returns to normal operation as well.

DTC Detecting Condition

Item	Detecting Condition	Possible cause
DTC Strategy	• Battery Voltage Monitoring	• Poor connection in power supply circuit (IGN+) • Faulty Alterator • Faulty HECU
Enable Conditions	• When Vign>17V±0.5V is continued for 500msec. - If the voltage recovers to normal operating range, the controller returns to normal state.	
Fail Safe	• The ABS/EBD/ESC functions are inhibited. • The ABS/EBD/ESC warning lamps are activated.	

Specification

Normal Voltage Range	ENG "ON"
	10V ~ 16V

Diagnostic Circuit Diagram

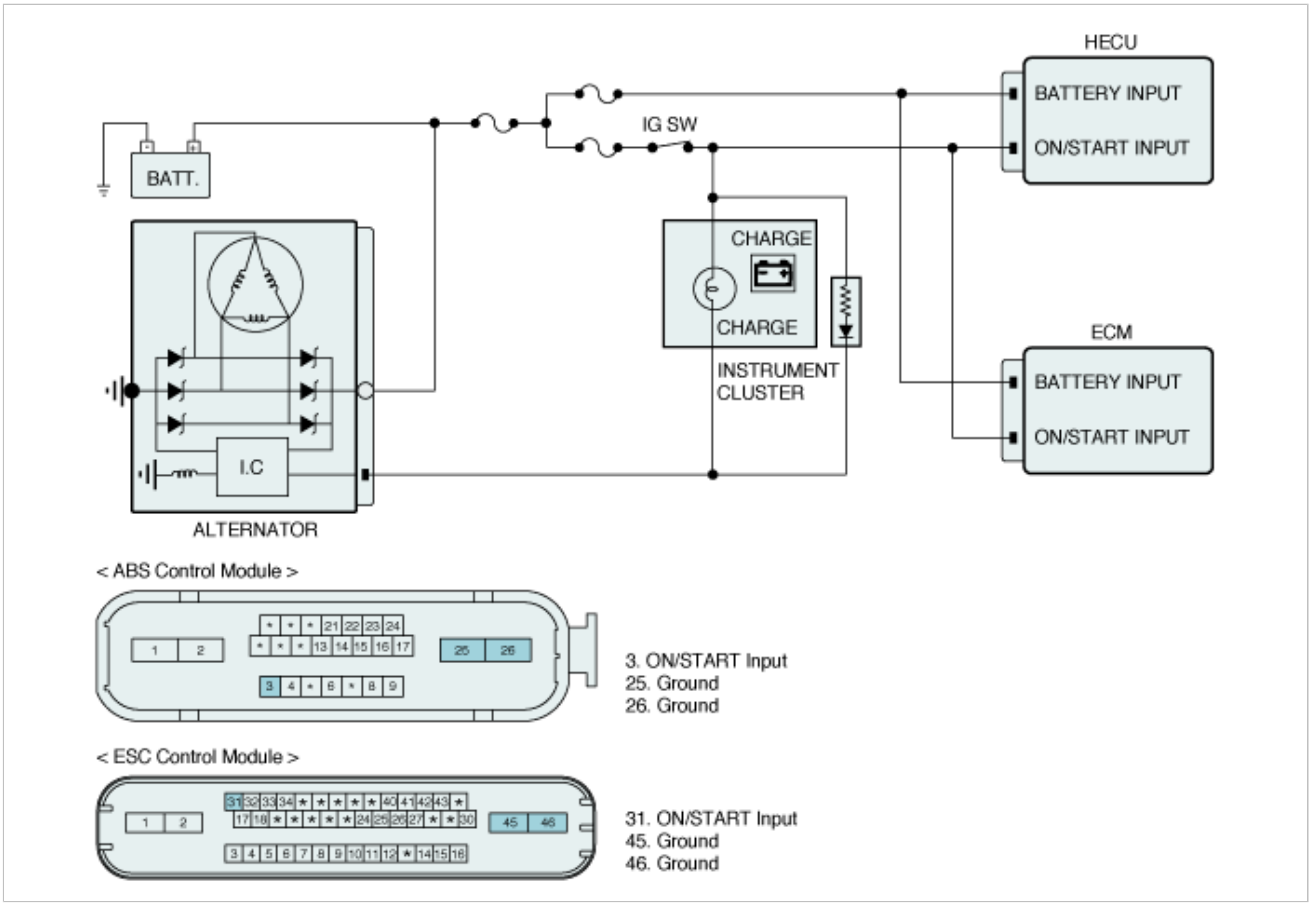

Monitor Scantool Data

1. Connect scantool to Data Link Connector(DLC)
2. Ignition "ON" & Engine "ON".
3. Monitor the "BATTERY VOLTAGE" parameter on the scantool.

Specification : Below. 17.5V

Sensor Name	Value	Ref. Min	Ref. Max	Unit	Test Condition
☑ Battery Positive Voltage	14.0			V	-

Fig.1

Fig 1) Test Condition : Ignition "ON" & Engine "ON".
Normal Data

4. Is parameter displayed within specifications?

YES	▸ Fault is intermittent caused by poor connection in power harness (IGN+) and/or HECU's connector or was repaired and HECU memory was not cleared. Thoroughly check connectors for looseness, poor connection, bending, corrosion, contamination, deterioration, or damage. Repair or replace as necessary and then go to "Verification of Vehicle Repair" procedure.
NO	▸ Go to "Terminal and Connector Inspection" procedure.

Terminal and Connector Inspection

1. Many malfunctions in the electrical system are caused by poor harness(es) and terminal condition. Faults can also be caused by interference from other electrical systems, and mechanical or chemical damage.
2. Thoroughly check connectors for looseness, poor connection, bending, corrosion, contamination, deterioration, or damage.
3. Has a problem been found?

YES	▸ Repair as necessary and then go to "Verification of Vehicle Repair" procedure.
NO	▸ Verify presence of battery voltage codes in other ECUs (SRS, etc). If battery voltage codes are not present in other ECUs, go to "Power Circuit Inspection" procedure. If battery voltage codes are present in other ECUs, go to "Alternator Output Voltage Inspection" procedure.

Alternator Output Voltage Inspection

■ Charging System Check

1. Ignition "ON" & Engine "ON".
2. Maintain ENG RPM 2,500RPM over 2 minutes.
3. Measure voltage between the battery terminal(+) and the battery terminal(-).

Specification : Below. 17±0.5V

4. Is the measured value within specifications?

YES	▸ Go to "Power Circuit Inspection" procedure.
NO	▸ Check that the tension of drive belt, ENG RPM, fuse, terminal of battery, all terminals of alternator are in good condition and Check for damaged harness and poor connection between alternator and battery. If OK repair or replace alternator and then go to "Verification of vehicle Repair" procedure.

Power Circuit Inspection

■ **Open or Short Check**

1. Ignition "ON" & Engine "OFF".
2. Measure voltage between the battery terminal(+) and power terminal of the HECU harness connector.

Specification : Approx. below 0.2V

3. Is the measured value within specifications?

YES	▸ Go to "Ground Circuit Inspection" procedure.
NO	▸ Check for open or blown ABS fuse referring to "Circuit Diagram". Repair open or short in power circuit between battery and HECU harness connector and then go to "Verification of vehicle Repair" procedure.

Ground Circuit Inspection

■ **Open or Short Check**

1. Ignition "OFF" & Engine "OFF".
2. Disconnect HECU connector.
3. Measure resistance between ground terminal of the HECU harness connector and chassis ground.

Specification : Approx. below 1Ω

4. Is the measured value within specifications?

YES	▸ Substitute with a known-good HECU and check for proper operation. If problem is corrected, replace HECU and then go to "Verification of Vehicle Repair" procedure.
NO	▸ Repair open or short in ground circuit between HECU harness connector and chassis ground and then go to "Verification of vehicle Repair" procedure.

Verification of Vehicle Repair

After a repair, it is essential to verify that the fault has been corrected.

1. Connect scantool and select "Diagnostic Trouble Codes(DTCs)" mode.
2. Using a scantool, Clear DTC.
3. Operate the vehicle within DTC Detecting Condition in General Information.
4. Using a scantool, Check DTC present.
5. Are any DTCs present ?

YES	▸ Go to the applicable troubleshooting procedure.
NO	▸ System performing to specification at this time.

General Description

The ABS ECU(Electronic Control Unit) checks the battery voltage and alternator output voltage to determine, as a safety issue, whether the ABS system can operate normally or not.
The normal battery voltage range is essential for controlling the ABS system as intended.

DTC Description

The ABS ECU monitors the battery voltage and alternator output voltage by reading the value of voltage.
When the voltage is lower than the expected normal value, this code is set.
The ABS/ESC functions are prohibited and the EBD function is allowed on LOW VOLTAGE CONDITION, the ABS/EBD/ESC functions are prohibited on UNDER VOLTAGE CONDITION.
If the voltage recovers, to within normal operating ranges, then the controller returns to normal operations as well.

DTC Detecting Condition

Item		Detecting Condition	Possible cause
DTC Strategy		• Battery Voltage Monitoring	• Poor connection in power supply circuit (IGN+) • Faulty HECU • Discharge of electricity
Case1 (Low voltage)	Enable Conditions	• When Vign<9.5V±0.5V is continued for 500msec during Vref >= 7Km/h. • When Vign<8.5V±0.5V is continued for 500msec during Vref < 7Km/h or ABS/ESP(ESC) control. - If IGN voltage is recovered to normal operating voltage, the system recovers to normal state.	
	Fail Safe	• Outside the ABS control cycle : Inhibit the ABS/ESC control, allow the EBD control , The ABS/ESC warning lamps are activated, When the voltage recovers the normal operating range, erase the error code. • Inside the ABS control cycle : Inhibit the ABS/ESC control. The ABS/ESC warning lamps are activated. Althought the voltage recovers the normal operating range, warning lamps are illuminated and the error code is always stored.	
Case2 (Under voltage)	Enable Conditions	• When Vign<7.2V±0.5V is continued for 56msec. - If IGN voltage is recovered to normal operating voltage, the system recovers to normal state.	
	Fail Safe	• The ABS/EBD/ESC functions are inhibited. • The ABS/EBD/ESC warning lamps are activated.	

Specification

Normal Voltage Range	ENG "ON"
	10V ~ 16V

Diagnostic Circuit Diagram

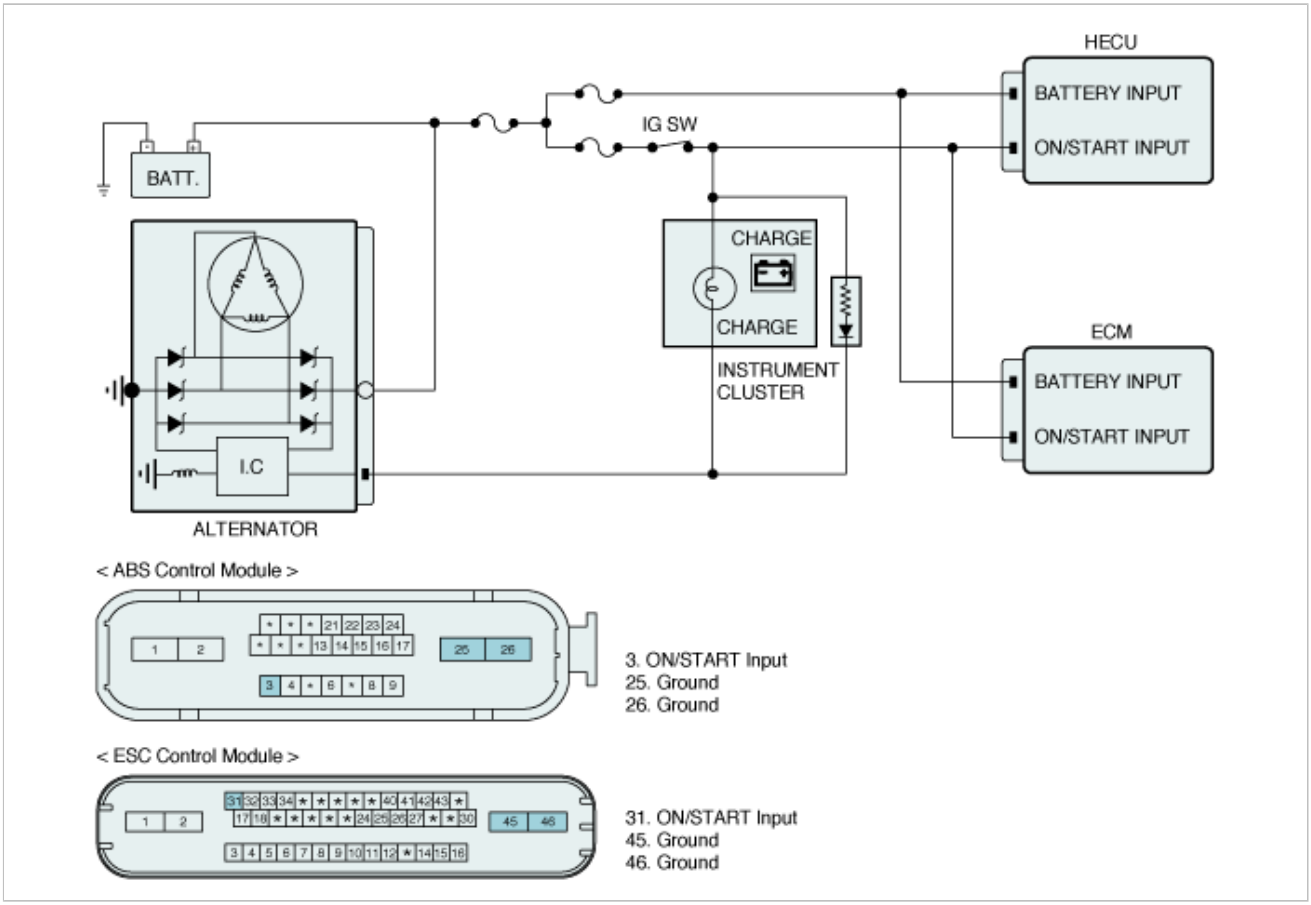

Monitor Scantool Data

1. Connect scantool to Data Link Connector(DLC)
2. Ignition "ON" & Engine "ON".
3. Monitor the "BATTERY VOLTAGE" parameter on the scantool.

Specification : Above. 9±0.5V

Sensor Name	Value	Ref. Min	Ref. Max	Unit	Test Condition
☑ Battery Positive Voltage	14.0			V	-

Fig.1

Fig 1) Test Condition : Ignition "ON" & Engine "ON".
Normal Data

4. Is parameter displayed within specifications?

YES	▸ Fault is intermittent caused by poor connection in power harness (IGN+) and/or HECU's connector or was repaired and HECU memory was not cleared. Thoroughly check connectors for looseness, poor connection, bending, corrosion, contamination, deterioration, or damage. Repair or replace as necessary and then go to "Verification of Vehicle Repair" procedure.
NO	▸ Go to "Terminal and Connector Inspection" procedure.

Terminal and Connector Inspection

1. Many malfunctions in the electrical system are caused by poor harness(es) and terminal condition. Faults can also be caused by interference from other electrical systems, and mechanical or chemical damage.
2. Thoroughly check connectors for looseness, poor connection, bending, corrosion, contamination, deterioration, or damage.
3. Has a problem been found?

YES	▸ Repair as necessary and then go to "Verification of Vehicle Repair" procedure.
NO	▸ Go to "Alternator Output Voltage Inspection" procedure.

Alternator Output Voltage Inspection

■ Charging System Check

1. Ignition "ON" & Engine "ON".
2. Maintain ENG RPM 2,500RPM over 2 minutes.
3. Measure voltage between the battery terminal(+) and the battery terminal(-).

Specification : Above. 9±0.5V

4. Is the measured value within specifications?

YES	▸ Go to "Power Circuit Inspection" procedure.
NO	▸ Check that the tension of drive belt, ENG RPM, fuse, terminal of battery, all terminals of alternator are in good condition and Check for damaged harness and poor connection between alternator and battery. If OK repair or replace alternator and then go to "Verification of vehicle Repair" procedure.

Power Circuit Inspection

■ Open or Short Check

1. Ignition "ON" & Engine "OFF".
2. Measure voltage between the battery terminal(+) and power terminal of the HECU harness connector.

Specification : Approx. below 0.2V

3. Is the measured value within specifications?

YES	▸ Go to "Ground Circuit Inspection" procedure.
NO	▸ Check for open or blown ABS fuse referring to "Circuit Diagram". Repair open or short in power circuit between battery and HECU harness connector and then go to "Verification of vehicle Repair" procedure.

Ground Circuit Inspection

■ Open or Short Check

1. Ignition "OFF" & Engine "OFF".
2. Disconnect HECU connector.
3. Measure resistance between ground terminal of the HECU harness connector and chassis ground.

Specification : Approx. below 1Ω

4. Is the measured value within specifications?

YES	▸ Substitute with a known-good HECU and check for proper operation. If problem is corrected, replace HECU and then go to "Verification of Vehicle Repair" procedure.
NO	▸ Repair open or short in ground circuit between HECU harness connector and chassis ground and then go to "Verification of vehicle Repair" procedure.

Verification of Vehicle Repair

After a repair, it is essential to verify that the fault has been corrected.

1. Connect scantool and select "Diagnostic Trouble Codes(DTCs)" mode.
2. Using a scantool, Clear DTC.
3. Operate the vehicle within DTC Detecting Condition in General Information.
4. Using a scantool, Check DTC present.
5. Are any DTCs present ?

YES	▸ Go to the applicable troubleshooting procedure.
NO	▸ System performing to specification at this time.

General Description

The HECU monitors supply voltage of each sensor for normal ESC control.
If supply voltage is out of specified range ABS/ESC warning lamps are turned on and ABS/ESC controls are inhibited.

DTC Description

A failure is detected if the external sensor supply voltage is out of the specified range for more than the specified min. fault duration.

DTC Detecting Condition

Item	Detecting Condition	Possible cause
DTC Strategy	• Battery Voltage Monitoring	• Faulty HECU • Poor connection in power supply circuit to sensor
Enable Conditions	• During sensor power ON, If the voltage of sensor power is out of the specified range for 500ms. • During sensor power OFF, If the voltage of sensor power is out of the specified range for 500ms.	
Fail Safe	• ABS/ESC functions are inhibited, EBD function is allowed and the ABS/ESC warning lamps are activated.	

Diagnostic Circuit Diagram

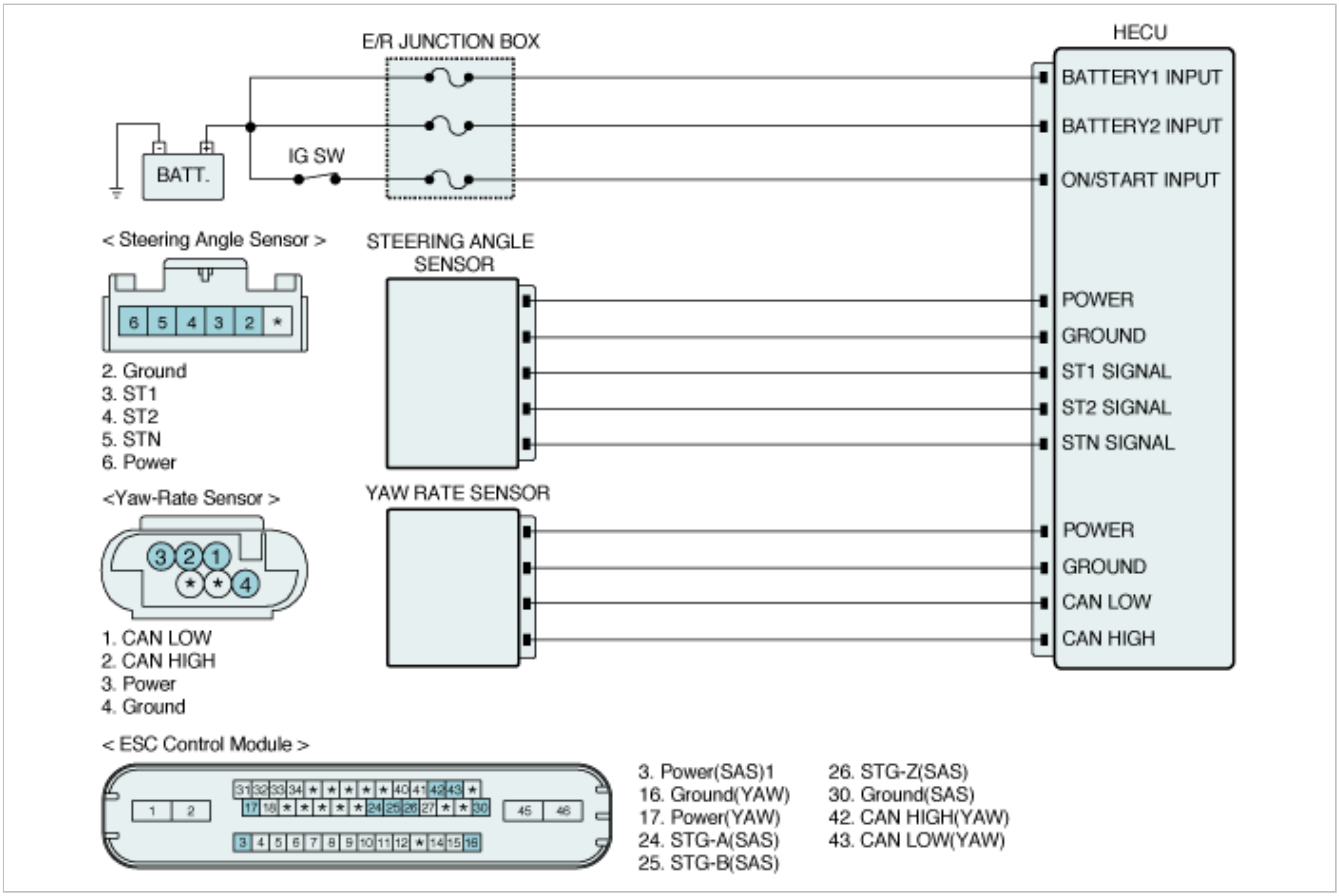

Monitor Scantool Data

1. Connect scantool to Data Link Connector(DLC)
2. Ignition "ON" & Engine "ON".
3. Monitor the "BATTERY VOLTAGE" parameter on the scantool.

Specification :
BATTERY VOLTAGE (Approx. 10V ~ 16V)

4. Is parameter displayed within specifications?

YES	▸ Fault is intermittent caused by poor connection in HECU's connector or was repaired and HECU memory was not cleared. Thoroughly check connectors for looseness, poor connection, bending, corrosion, contamination, deterioration, or damage. Repair or replace as necessary and then go to "Verification of Vehicle Repair" procedure.
NO	▸ Go to "Terminal and Connector Inspection" procedure.

Terminal and Connector Inspection

1. Many malfunctions in the electrical system are caused by poor harness(es) and terminal condition. Faults can also be caused by interference from other electrical systems, and mechanical or chemical damage.
2. Thoroughly check connectors for looseness, poor connection, bending, corrosion, contamination, deterioration, or damage.
3. Has a problem been found?

YES	▸ Repair as necessary and then go to "Verification of Vehicle Repair" procedure.
NO	▸ Go to "Power Circuit Inspection" procedure.

Power Circuit Inspection

■ Open or Short Check

1. Ignition "ON" & Engine "OFF".
2. Measure voltage between power terminal of the steering angle sensor, Yaw rate & lateral G sensor harness connector and chassis ground.

Specification :
Approx. 12V (steering angle sensor, Yaw rate & lateral G sensor)

3. Is the measured value within specifications?

YES	▸ Substitute with a known-good HECU and check for proper operation. If problem is corrected, replace HECU and then go to "Verification of Vehicle Repair" procedure.
NO	▸ Repair open or short in power circuit between HECU harness connector and steering angle sensor, Yaw rate & lateral G sensor harness connector and then go to "Verification of vehicle Repair" procedure. If there is no problem in power circuit, Substitute with a known-good HECU and check for proper operation. If problem is corrected, replace HECU and then go to "Verification of Vehicle Repair" procedure.

Verification of Vehicle Repair

After a repair, it is essential to verify that the fault has been corrected.

1. Connect scantool and select "Diagnostic Trouble Codes(DTCs)" mode.
2. Using a scantool, Clear DTC.
3. Operate the vehicle within DTC Detecting Condition in General Information.
4. Using a scantool, Check DTC present.
5. Are any DTCs present ?

YES	▶ Go to the applicable troubleshooting procedure.
NO	▶ System performing to specification at this time.

General Description

The wheel speed sensor is the essential component the ABS ECU uses to calculate vehicle speed and to determine whether wheel lock occurs.
For example, rear wheel speed signal is used as a referecnce value, for vehicle speed, in front wheel drive vehicles, and if a difference between front and rear wheel speed occurs, then ABS control is performed.
Wheel speed sensor is active hall-sensor type.

DTC Description

The ABS ECU monitors the wheel speed sensor circuit continuously.
If the sensor signal current is continuously out of the specified range for 140msec, then the HECU determines that the circuit is open/short, and sets this code.
Warning lamp is turned OFF unless additional faults are detected when the IG KEY is turned ON again, and wheel speed is more than 10 Km/h (6.2mph).

DTC Detecting Condition

Item	Detecting Condition	Possible cause
DTC Strategy	• Current Monitoring	• Open or short of Wheel speed sensor circuit • Faulty Wheel speed sensor
Enable Conditions	• When the sensor signal current is continuously out of the specified range of 4 mA ± 10% ~ 22 mA ± 10% for 140msec.	
Fail Safe	1. Only one wheel failure : Inhibit the ABS/ESC control, allow the EBD control. The ABS/ESC warning lamps are activated, the EBD warning lamp is not activated. 2. More than two wheels failure : The ABS/EBD/ESC functions are inhibited. The ABS/EBD/ESC warning lamps are activated.	

Specification

Sensor Type	Output Voltage		Airgap
	HIGH	LOW	
Active Type	1.18~1.68V	0.59~0.84V	0.4~1.5mm

Diagnostic Circuit Diagram

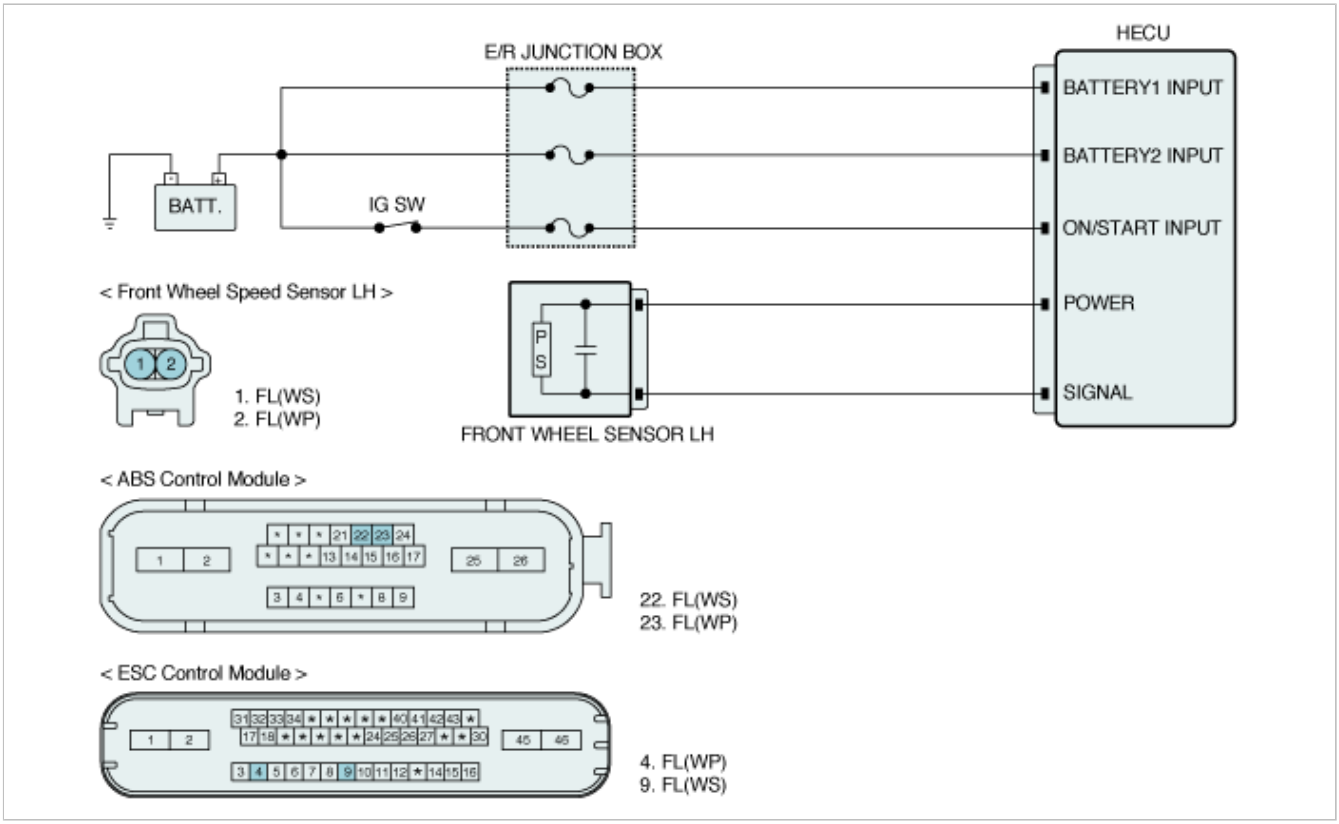

Signal Waveform & Data

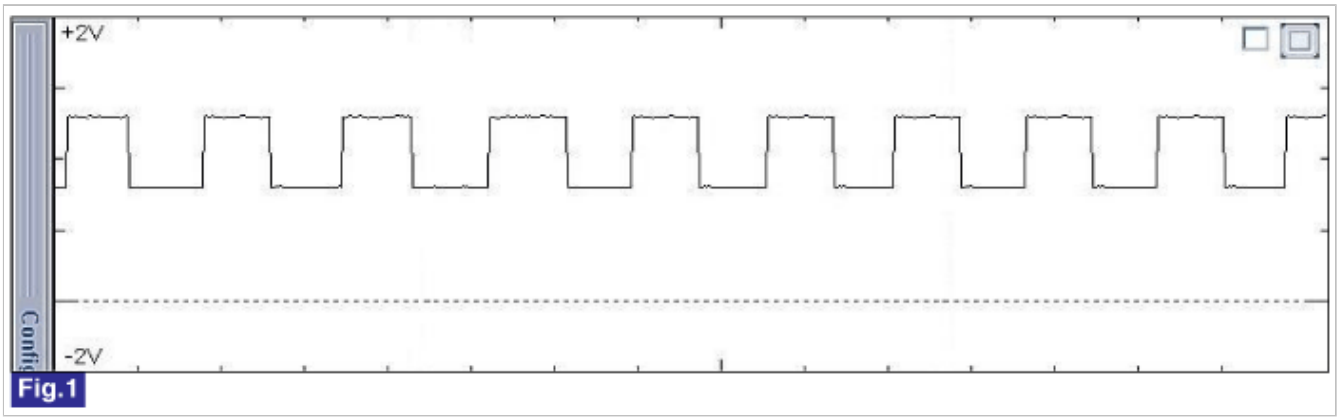

Fig 1) Normal waveform of wheel speed sensor (Active type)
- High : Approx. 1.4V, Low : Approx. 0.7V

Monitor Scantool Data

1. Ignition "ON" & Engine "ON".
2. Connect scantool to Data Link Connector(DLC)
3. Start and drive vehicle in gear and maintain vehicle speed at or above 10km/h. (6.2mph)
4. Monitor the "WHEEL SPEED(FL)" parameter on the Scantool.

Specification :
Compare with other parameters related to wheel speed sensor.
If it is the same as other parameters, it is in normal condition.

5. Is parameter displayed within specifications?

YES	▶ Fault is intermittent caused by poor connection in wheel speed sensor harness (FL) and/or HECU's connector or was repaired and HECU memory was not cleared.

	Thoroughly check connectors for looseness, poor connection, bending, corrosion, contamination, deterioration, or damage. Repair or replace as necessary and then go to "Verification of Vehicle Repair" procedure.
NO	▸ Go to "Terminal and Connector Inspection" procedure.

Terminal and Connector Inspection

1. Many malfunctions in the electrical system are caused by poor harness(es) and terminal condition. Faults can also be caused by interference from other electrical systems, and mechanical or chemical damage.
2. Thoroughly check connectors for looseness, poor connection, bending, corrosion, contamination, deterioration, or damage.
3. Has a problem been found?

YES	▸ Repair as necessary and then go to "Verification of Vehicle Repair" procedure.
NO	▸ Go to "Power Circuit Inspection" procedure.

Power Circuit Inspection

■ Open or Short Check

1. Ignition "ON" & Engine "OFF".
2. Measure voltage between power terminal of the wheel speed sensor harness connector and chassis ground.

Specification : Approx. B+

3. Is the measured value within specifications?

YES	▸ Go to "Signal Circuit Inspection" procedure.
NO	▸ Repair open or short in power circuit between HECU harness connector and wheel speed sensor harness connector and then go to "Verification of vehicle Repair" procedure. If there is no problem in Power circuit, Substitute with a known-good HECU and check for proper operation. If problem is corrected, replace HECU and then go to "Verification of Vehicle Repair" procedure.

Signal Circuit Inspection

■ Wheel speed sensor circuit check

1. Lift the vehicle.
2. Ignition "ON" & Engine "OFF".
3. Turn the wheel by hand.
4. Measure waveform between wheel speed sensor signal terminal of the HECU harness connector and chassis ground with osciloscope.

Specification : High : 1.18~1.68V , Low : 0.59~0.84V

5. Is the measured waveform within specifications?

YES	▸ Go to "Component Inspection" procedure.
NO	▸ Repair open or short in signal circuit between HECU harness connector and wheel speed sensor harness connector, and then go to "Verification of vehicle Repair" procedure. If there is no problem in signal circuit, go to "Component Inspection" procedure.

Component Inspection

■ **Wheel speed sensor circuit check**

1. Lift the vehicle.
2. Ignition "ON" & Engine "OFF".
3. Turn the wheel by hand.
4. Measure waveform between signal terminal of the wheel speed sensor harness connector and chassis ground with osciloscope.

Specification : High : 1.18~1.68V , Low : 0.59~0.84V

5. Is the measured waveform within specifications?

YES	▸ Fault is intermittent caused by poor connection in wheel speed sensor harness (FL). Go to "Verification of Vehicle Repair" procedure.
NO	▸ Substitute with a known-good Wheel speed sensor and check for proper operation. If problem is corrected, replace Wheel speed sensor and then go to "Verification of Vehicle Repair" procedure.

Verification of Vehicle Repair

After a repair, it is essential to verify that the fault has been corrected.

1. Connect scantool and select "Diagnostic Trouble Codes(DTCs)" mode.
2. Using a scantool, Clear DTC.
3. Operate the vehicle within DTC Detecting Condition in General Information. (Start and drive vehicle in gear and maintain vehicle speed at or above 10kmh. (6.2mph))
4. Using a scantool, Check DTC present.
5. Are any DTCs present ?

YES	▸ Go to the applicable troubleshooting procedure.
NO	▸ System performing to specification at this time.

General Description

The wheel speed sensor is the essential component the ABS ECU uses to calculate vehicle speed and to determine whether wheel lock occurs.
For example, rear wheel speed signal is used as a referecnce value, for vehicle speed, in front wheel drive vehicles, and if a difference between front and rear wheel speed occurs, then ABS control is performed.
Wheel speed sensor is active hall-sensor type.

DTC Description

The ABS ECU monitors the wheel speed sensor signal continuously.
This code is set if an abnormal speed change ratio is detected while the vehicle speed is more than 2Km/h.
Warning lamp is turned OFF unless additional faults are detected when the IG KEY is turned ON again, and wheel speed is more than 10 Km/h.

DTC Detecting Condition

Item		Detecting Condition	Possible cause
DTC Strategy		• Signal monitoring	• Improper installation of wheel speed sensor • Abnormal Rotor and wheel bearing • Faulty Wheel speed sensor
Enable Conditions	Case1	• Max. wheel velocity exceeds 20km/h and the wheel velocity is 40% of max. wheel velocity. if this condition is lasted for 2 minutes. • Max. wheel velocity exceeds 40km/h and the wheel velocity is 60% of max. wheel velocity. if this condition is lasted for 2 minutes.	
	Case2	• Controller counts the number of the wheel acceleration of 100g[(25km/h) for 7ms]. When the numbers at one wheel exceed 56 times, or When the numbers at more two wheels exceed 5 times, controller recognize the failure. • Controller counts the number of the wheel acceleration of 70g[(17.5km/h) for 7ms]. When the numbers at one wheel exceed 126 times, or When the numbers at more two wheels exceed 20 times, controller recognize the failure. • Controller counts the number of the wheel deceleration of -100g[(-25km/h) for 7ms]. When the numbers at each wheel exceed 56 times, controller recognize the failure. • The wheel deceleration of –100g[(-25km/h) for 7ms] causes the controller to start monitoring this failure and to compare the wheel velocity with the vehicle velocity from next cycle. When its difference of -100g is continued for more than 140msec, controller recognize the failure. • In case that any sensor failure at other wheel was already detected, When the numbers of 100g at each wheel exceed 5 times, or When the numbers of 70g at each wheel exceed 20 times, controller recognize the failure. - The counter of speed jump is cleared every 30min. - This monitoring is performed for the period that the velocity of each wheel exceeds 2km/h.	
Fail Safe		1. Only one wheel failure : Inhibit the ABS/ESCcontrol, allow the EBD control. The ABS/ESC warning lamps are activated, the EBD warning lamp is not activated. 2. More than two wheels failure : The ABS/EBD/ESC	

	functions are inhibited. The ABS/EBD/ESC warning lamps are activated.	

Specification

Sensor Type	Output Voltage		Airgap
	HIGH	LOW	
Active Type	1.18~1.68V	0.59~0.84V	0.4~1.5mm

Diagnostic Circuit Diagram

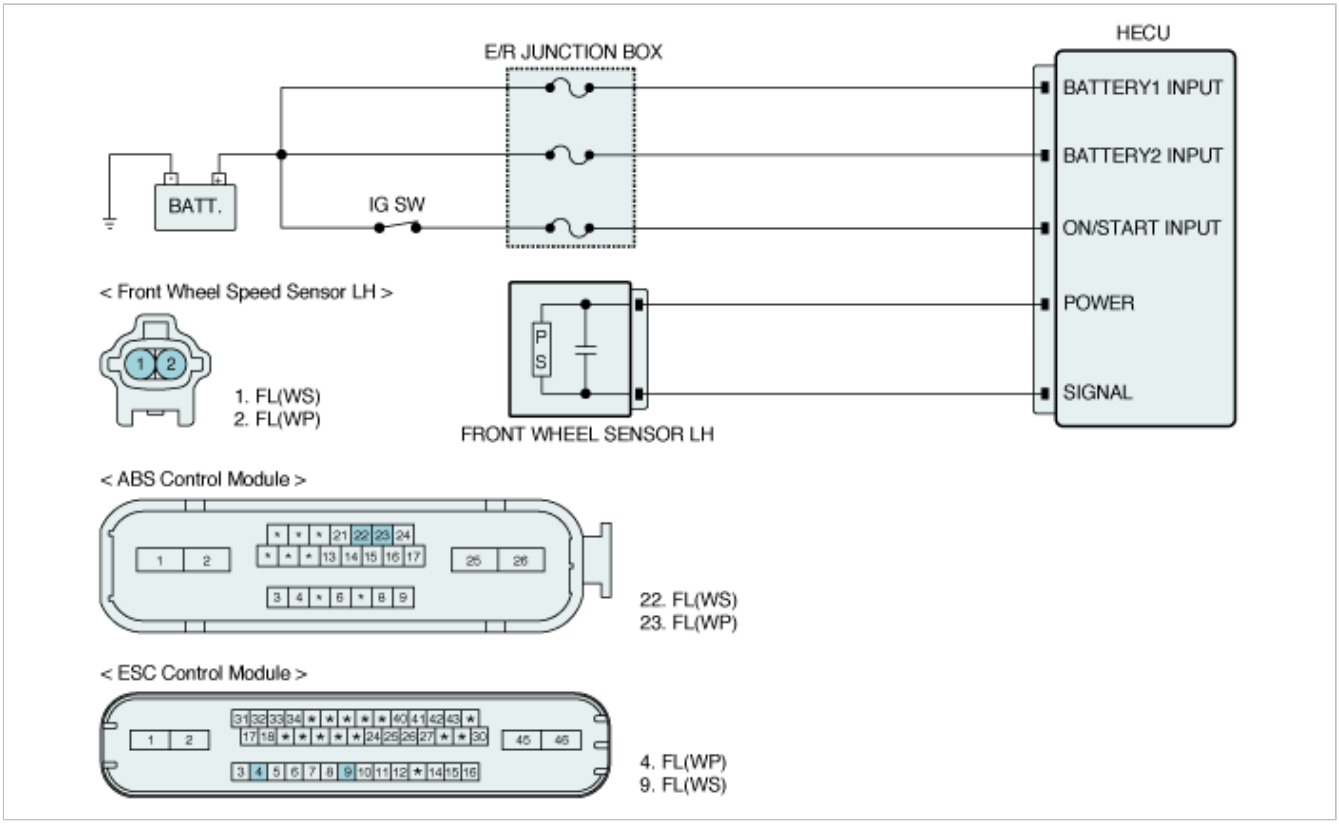

Signal Waveform & Data

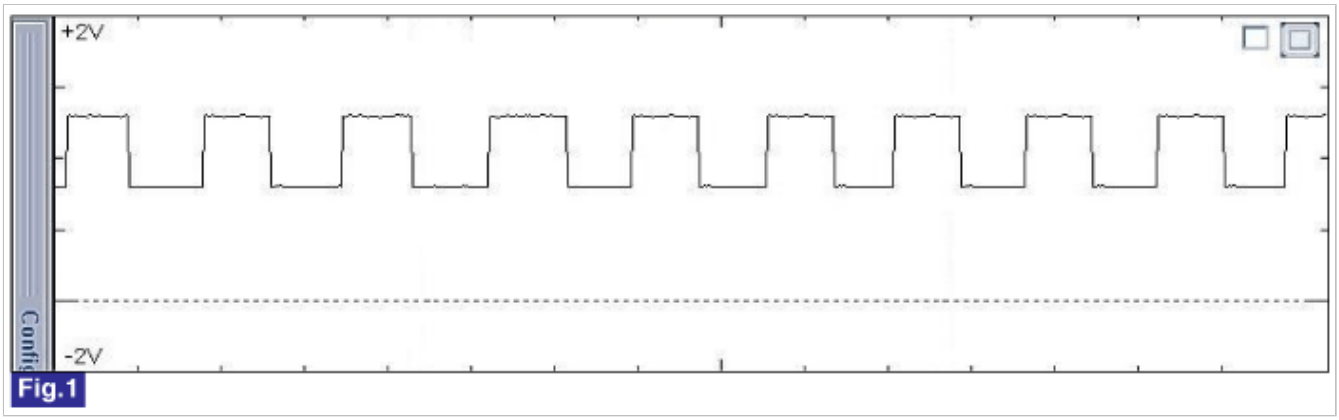

Fig 1) Normal waveform of wheel speed sensor (Active type)
- High : Approx. 1.4V, Low : Approx. 0.7V

Monitor Scantool Data

1. Ignition "ON" & Engine "ON".
2. Connect scantool to Data Link Connector(DLC)

3. Start and drive vehicle in gear and maintain vehicle speed at or above 40km/h. (24mph)
4. Monitor the "WHEEL SPEED(FL)" parameter on the Scantool.

Specification :
Compare with other parameters related to wheel speed sensor.
If it is the same as other parameters, it is in normal condition.

5. Is parameter displayed within specifications?

YES	▸ Fault is intermittent caused by poor connection in wheel speed sensor harness (FL) and/or HECU's connector or was repaired and HECU memory was not cleared. Thoroughly check connectors for looseness, poor connection, bending, corrosion, contamination, deterioration, or damage. Repair or replace as necessary and then go to "Verification of Vehicle Repair" procedure.
NO	▸ Go to "Component Inspection" Procedure.

Component Inspection

■ **Wheel speed sensor circuit check**

1. Lift the vehicle.
2. Ignition "ON" & Engine "OFF".
3. Turn the wheel by hand.
4. Measure waveform between signal terminal of the wheel speed sensor harness connector and chassis ground with osciloscope.

Specification : High : 1.18~1.68V , Low : 0.59~0.84V

5. Is the measured waveform within specifications?

YES	▸ Fault is intermittent caused by faulty HECU, wheel speed sensor or external noise, an interference between harnesses. Thoroughly check connectors for looseness, poor connection, bending, corrosion, contamination, deterioration, or damage. Repair as necessary and then go to "Verification of Vehicle Repair" procedure. If there is no problem in signal circuit, Substitute with a known-good HECU and check for proper operation. If problem is corrected, replace HECU and then go to "Verification of Vehicle Repair" rocedure.
NO	▸ Check for improper installation of wheel speed sensor. If NG, repair as necessary and then go to "Verification of vehicle Repair" procedure. Check for damage of rotor teeth or wheel bearing. If NG, repair as necessary and then go to "Verification of vehicle Repair" procedure. Substitute with a known-good Wheel speed sensor and check for proper operation. If problem is corrected, replace Wheel speed sensor and then go to "Verification of Vehicle Repair" procedure.

Verification of Vehicle Repair

After a repair, it is essential to verify that the fault has been corrected.

1. Connect scantool and select "Diagnostic Trouble Codes(DTCs)" mode.
2. Using a scantool, Clear DTC.
3. Operate the vehicle within DTC Detecting Condition in General Information. (Start and drive vehicle in gear and maintain vehicle speed at or above 40kmh. (24mph))
4. Using a scantool, Check DTC present.
5. Are any DTCs present ?

YES	▸ Go to the applicable troubleshooting procedure.
NO	▸ System performing to specification at this time.

General Description

The wheel speed sensor is the essential component the ABS ECU uses to calculate vehicle speed and to determine whether wheel lock occurs.
For example, rear wheel speed signal is used as a referecnce value, for vehicle speed, in front wheel drive vehicles, and if a difference between front and rear wheel speed occurs, then ABS control is performed.
Wheel speed sensor is active hall-sensor type.

DTC Description

The ABS ECU monitors the wheel speed sensor signal continuously.
This code is set when the sensor air gap is out of specified range or when the ABS control cycle is continued abnormally.
The HECU checks for air gap malfunctioning by monitoring the sensor signal at speeds between 2Km/h to 10 Km/h.
Warning lamp is turned OFF unless additional faults are detected when the IG KEY is turned ON again, and wheel speed is more than 10 Km/h (6.2mph).

DTC Detecting Condition

Item		Detecting Condition	Possible cause
DTC Strategy		• Signal monitoring	• Improper installation of wheel speed sensor • Abnormal Rotor and wheel bearing • Faulty Wheel speed sensor
Case1 (Large Air-Gap)	Enable Conditions	• When the minimum wheel velocity is 2km/h and the velocity of other wheels exceed 10km/h (6.2mph) with the acceleration of < 0.4g, the controller start comparing the velocity of other wheels except the min. wheel. if their difference below 4km/h (2.5mph) is continued for 140msec, Otherwise, if their difference beyond 4km/h (2.5mph) or >0.4g is continued for 2 minutes. • In < 0.4g, when the velocity of more two wheels is 2km/h (1.2mph) and the max. wheel velocity exceeds 10km/h (6.2mph), the condition is continued for 20 sec. Otherwise, In >0.4g, the condition is 2 minutes. • After velocity of 4 wheel exceeds 10km/h (6.2mph), when velocity of 1 wheel or 2 wheel is 2km/h (1.2mph)and difference of other 2 wheel velocity is less than 4km/h (2.5mph) under that those velocity is more than 10km/h (6.2mph), if that conditions are continued for 12 seconds. - This monitoring is performed for the period that the minimum velocity rises from 2km/h (1.2mph) to 10km/h (6.2mph).	
Case2 (long term ABS mode)	Enable Conditions	• During the ABS control cycle, if the wheel velocity of 2km/h (1.2mph) is lasted for more than 12sec. • If the ABS control cycle is continued for more than 36sec.	
Fail Safe		1. Only one wheel failure : Inhibit the ABS/ESC control, allow the EBD control. The ABS/ESC warning lamps are activated, the EBD warning lamp is not activated. 2. More than two wheels failure : The ABS/EBD/ESC functions are inhibited. The ABS/EBD/ESC warning lamps are activated.	

Specification

Sensor Type	Output Voltage		Airgap
	HIGH	LOW	
Active Type	1.18~1.68V	0.59~0.84V	0.4~1.5mm

Diagnostic Circuit Diagram

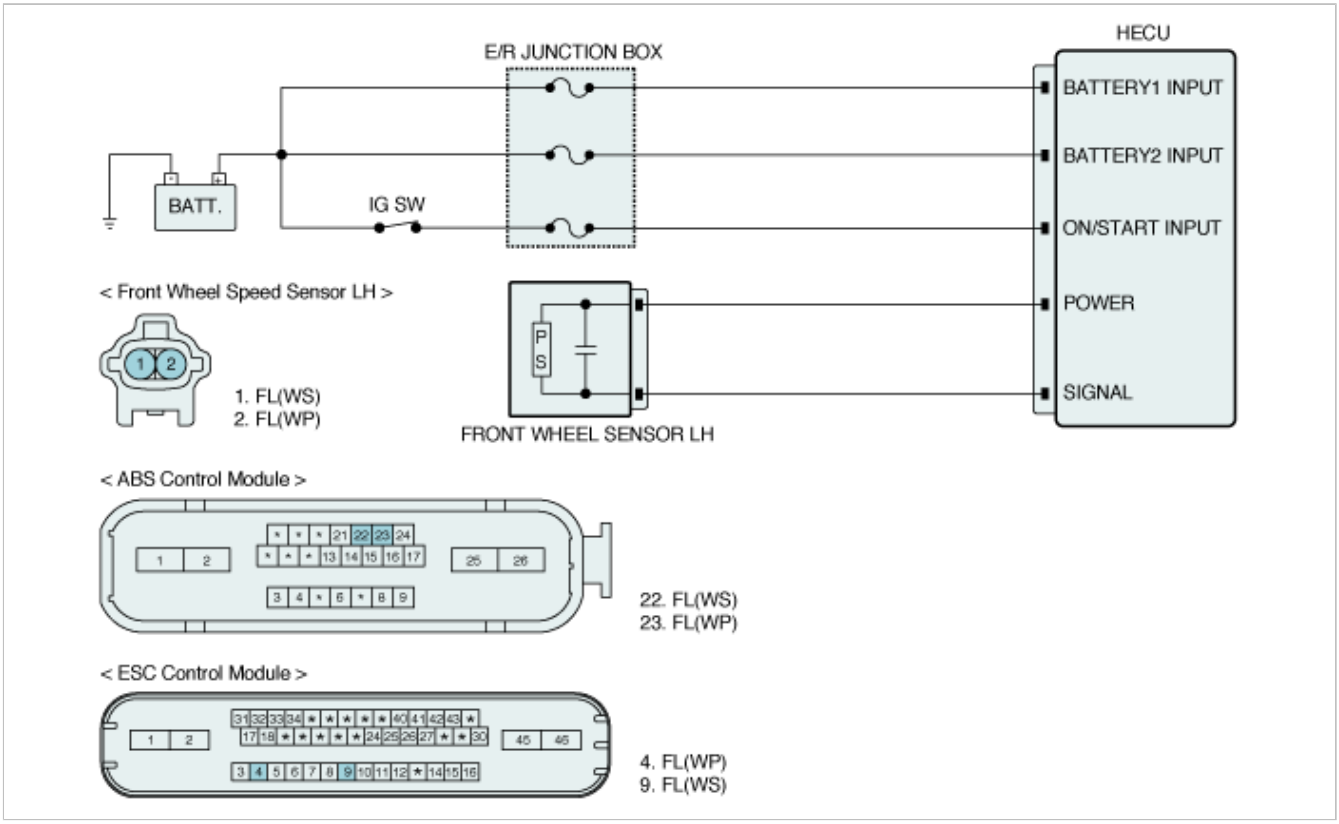

Signal Waveform & Data

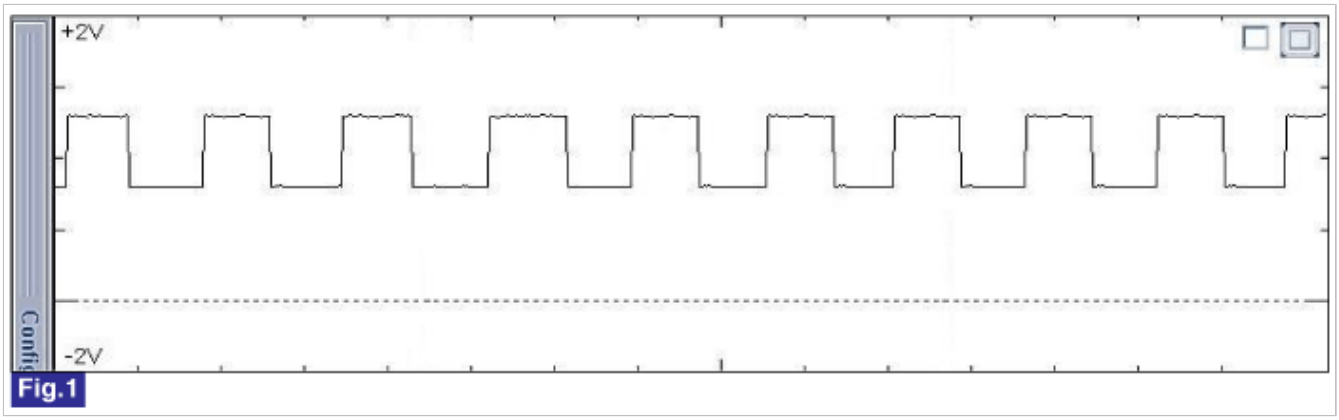

Fig 1) Normal waveform of wheel speed sensor (Active type)
- High : Approx. 1.4V, Low : Approx. 0.7V

Monitor Scantool Data

1. Ignition "ON" & Engine "ON".
2. Connect scantool to Data Link Connector(DLC)
3. Start and drive vehicle in gear and maintain vehicle speed at or above 10km/h. (6.2mph)
4. Monitor the "WHEEL SPEED(FL)" parameter on the Scantool.

Specification :
Compare with other parameters related to wheel speed sensor.
If it is the same as other parameters, it is in normal condition.

5. Is parameter displayed within specifications?

YES	▸ Fault is intermittent caused by poor connection in wheel speed sensor harness (FL) and/or HECU'sconnector or was repaired and HECU memory was not cleared. Thoroughly check connectors for looseness, poor connection, bending, corrosion, contamination, deterioration, or damage. Repair or replace as necessary and then go to "Verification of Vehicle Repair" procedure.
NO	▸ Go to "Component Inspection" Procedure.

Component Inspection

■ **Wheel speed sensor circuit check**

1. Lift the vehicle.
2. Ignition "ON" & Engine "OFF".
3. Turn the wheel by hand.
4. Measure waveform between signal terminal of the wheel speed sensor harness connector and chassis ground with osciloscope.

Specification : High : 1.18~1.68V , Low : 0.59~0.84V

5. Is the measured waveform within specifications?

YES	▸ Substitute with a known-good HECU and check for proper operation. If problem is corrected, replace HECU and then go to "Verification of Vehicle Repair"procedure.
NO	▸ Check for improper installation of wheel speed sensor. If NG, repair as necessary and then go to "Verification of vehicle Repair" procedure. Check for damage of rotor teeth or wheel bearing. If NG, repair as necessary and then go to "Verification of vehicle Repair" procedure. Substitute with a known-good Wheel speed sensor and check for proper operation. If problem is corrected, replace Wheel speed sensor and then go to "Verification of Vehicle Repair" procedure.

Verification of Vehicle Repair

After a repair, it is essential to verify that the fault has been corrected.

1. Connect scantool and select "Diagnostic Trouble Codes(DTCs)" mode.
2. Using a scantool, Clear DTC.
3. Operate the vehicle within DTC Detecting Condition in General Information. (Start and drive vehicle in gear and maintain vehicle speed at or above 10kmh. (6.2mph))
4. Using a scantool, Check DTC present.
5. Are any DTCs present ?

YES	▸ Go to the applicable troubleshooting procedure.
NO	▸ System performing to specification at this time.

General Description

The wheel speed sensor is the essential component the ABS ECU uses to calculate vehicle speed and to determine whether wheel lock occurs.
For example, rear wheel speed signal is used as a referecnce value, for vehicle speed, in front wheel drive vehicles, and if a difference between front and rear wheel speed occurs, then ABS control is performed.
Wheel speed sensor is active hall-sensor type.

DTC Description

The ABS ECU monitors the wheel speed sensor circuit continuously.
If the sensor signal current is continuously out of the specified range for 140msec, then the HECU determines that the circuit is open/short, and sets this code.
Warning lamp is turned OFF unless additional faults are detected when the IG KEY is turned ON again, and wheel speed is more than 10 Km/h.

DTC Detecting Condition

Item	Detecting Condition	Possible cause
DTC Strategy	• Current Monitoring	• Open or short of Wheel speed sensor circuit • Faulty Wheel speed sensor
Enable Conditions	• When the sensor signal current is continuously out of the specified range of 4 mA ± 10% ~ 22 mA ± 10% for 140msec.	
Fail Safe	1. Only one wheel failure : Inhibit the ABS/ESC control, allow the EBD control. The ABS/ESC warning lamps are activated, the EBD warning lamp is not activated. 2. More than two wheels failure : The ABS/EBD/ESC functions are inhibited. The ABS/EBD/ESC warning lamps are activated.	

Specification

Sensor Type	Output Voltage		Airgap
	HIGH	LOW	
Active Type	1.18~1.68V	0.59~0.84V	0.4~1.5mm

Diagnostic Circuit Diagram

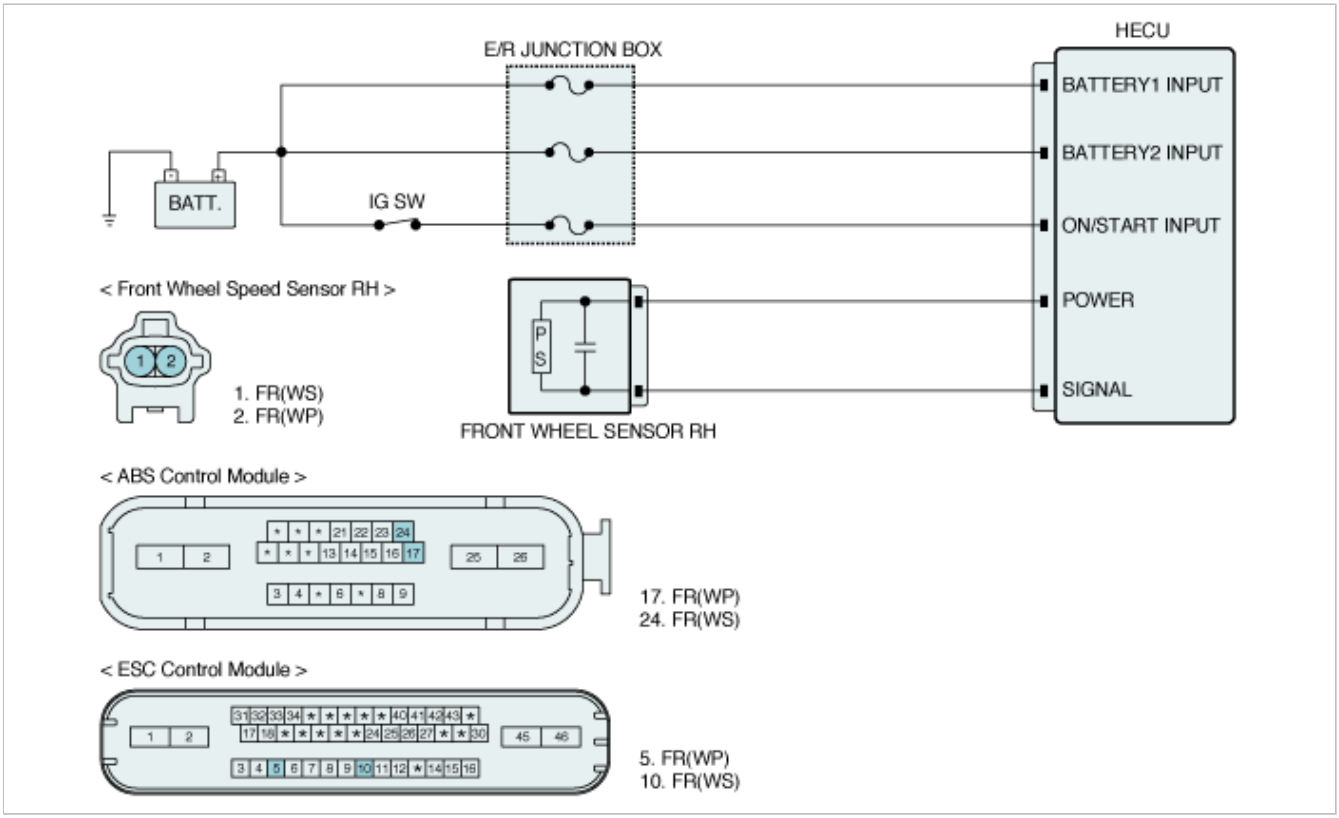

Signal Waveform & Data

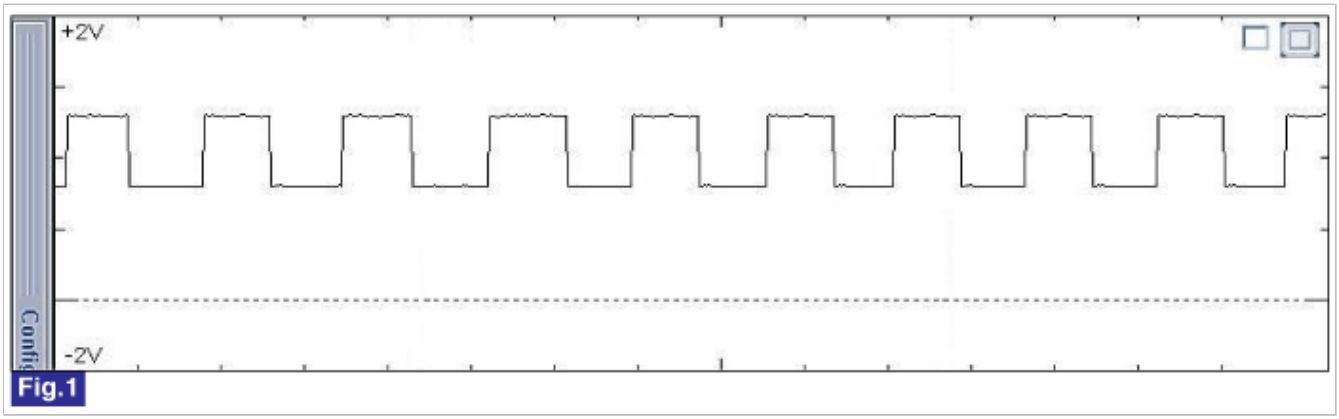

Fig 1) Normal waveform of wheel speed sensor (Active type)
- High : Approx. 1.4V, Low : Approx. 0.7V

Monitor Scantool Data

1. Ignition "ON" & Engine "ON".
2. Connect scantool to Data Link Connector(DLC)
3. Start and drive vehicle in gear and maintain vehicle speed at or above 10km/h. (6.2mph)
4. Monitor the "WHEEL SPEED(FR)" parameter on the Scantool.

Specification :
Compare with other parameters related to wheel speed sensor.
If it is the same as other parameters, it is in normal condition.

5. Is parameter displayed within specifications?

YES	▸ Fault is intermittent caused by poor connection in wheel speed sensor harness (FR) and/or HECU's connector or was repaired and HECU memory was not cleared.

	Thoroughly check connectors for looseness, poor connection, bending, corrosion, contamination, deterioration, or damage. Repair or replace as necessary and then go to "Verification of Vehicle Repair" procedure.
NO	▸ Go to "Terminal and Connector Inspection" procedure.

Terminal and Connector Inspection

1. Many malfunctions in the electrical system are caused by poor harness(es) and terminal condition. Faults can also be caused by interference from other electrical systems, and mechanical or chemical damage.
2. Thoroughly check connectors for looseness, poor connection, bending, corrosion, contamination, deterioration, or damage.
3. Has a problem been found?

YES	▸ Repair as necessary and then go to "Verification of Vehicle Repair" procedure.
NO	▸ Go to "Power Circuit Inspection" procedure.

Power Circuit Inspection

■ Open or Short Check

1. Ignition "ON" & Engine "OFF".
2. Measure voltage between power terminal of the wheel speed sensor harness connector and chassis ground.

Specification : Approx. B+

3. Is the measured value within specifications?

YES	▸ Go to "Signal Circuit Inspection" procedure.
NO	▸ Repair open or short in power circuit between HECU harness connector and wheel speed sensor harness connector and then go to "Verification of vehicle Repair" procedure. If there is no problem in Power circuit, Substitute with a known-good HECU and check for proper operation. If problem is corrected, replace HECU and then go to "Verification of Vehicle Repair" procedure.

Signal Circuit Inspection

■ Wheel speed sensor circuit check

1. Lift the vehicle.
2. Ignition "ON" & Engine "OFF".
3. Turn the wheel by hand.
4. Measure waveform between wheel speed sensor signal terminal of the HECU harness connector and chassis ground.

Specification : High : 1.18~1.68V , Low : 0.59~0.84V

5. Is the measured waveform within specifications?

YES	▸ Go to "Component Inspection" procedure.
NO	▸ Repair open or short in signal circuit between HECU harness connector and wheel speed sensor harness connector, and then go to "Verification of vehicle Repair" procedure. If there is no problem in signal circuit, go to "Component Inspection" procedure.

Component Inspection

■ **Wheel speed sensor circuit check**

1. Lift the vehicle.
2. Ignition "ON" & Engine "OFF".
3. Turn the wheel by hand.
4. Measure waveform between signal terminal of the wheel speed sensor harness connector and chassis ground with osciloscope.

Specification : High : 1.18~1.68V , Low : 0.59~0.84V

5. Is the measured waveform within specifications?

YES	▸ Fault is intermittent caused by poor connection in wheel speed sensor harness (FR). Go to "Verification of Vehicle Repair" procedure.
NO	▸ Substitute with a known-good Wheel speed sensor and check for proper operation. If problem is corrected, replace Wheel speed sensor and then go to "Verification of Vehicle Repair" procedure.

Verification of Vehicle Repair

After a repair, it is essential to verify that the fault has been corrected.

1. Connect scantool and select "Diagnostic Trouble Codes(DTCs)" mode.
2. Using a scantool, Clear DTC.
3. Operate the vehicle within DTC Detecting Condition in General Information. (Start and drive vehicle in gear and maintain vehicle speed at or above 10kmh. (6.2mph))
4. Using a scantool, Check DTC present.
5. Are any DTCs present ?

YES	▸ Go to the applicable troubleshooting procedure.
NO	▸ System performing to specification at this time.

General Description

The wheel speed sensor is the essential component the ABS ECU uses to calculate vehicle speed and to determine whether wheel lock occurs.
For example, rear wheel speed signal is used as a referecnce value, for vehicle speed, in front wheel drive vehicles, and if a difference between front and rear wheel speed occurs, then ABS control is performed.
Wheel speed sensor is active hall-sensor type.

DTC Description

The ABS ECU monitors the wheel speed sensor signal continuously.
This code is set if an abnormal speed change ratio is detected while the vehicle speed is more than 2Km/h.
Warning lamp is turned OFF unless additional faults are detected when the IG KEY is turned ON again, and wheel speed is more than 10 Km/h.

DTC Detecting Condition

Item		Detecting Condition	Possible cause
DTC Strategy		• Signal monitoring	• Improper installation of wheel speed sensor • Abnormal Rotor and wheel bearing • Faulty Wheel speed sensor
Enable Conditions	Case1	• Max. wheel velocity exceeds 20km/h and the wheel velocity is 40% of max. wheel velocity. if this condition is lasted for 2 minutes. • Max. wheel velocity exceeds 40km/h and the wheel velocity is 60% of max. wheel velocity. if this condition is lasted for 2 minutes.	
	Case2	• Controller counts the number of the wheel acceleration of 100g[(25km/h) for 7ms]. When the numbers at one wheel exceed 56 times, or When the numbers at more two wheels exceed 5 times, controller recognize the failure. • Controller counts the number of the wheel acceleration of 70g[(17.5km/h) for 7ms]. When the numbers at one wheel exceed 126 times, or When the numbers at more two wheels exceed 20 times, controller recognize the failure. • Controller counts the number of the wheel deceleration of -100g[(-25km/h) for 7ms]. When the numbers at each wheel exceed 56 times, controller recognize the failure. • The wheel deceleration of –100g[(-25km/h) for 7ms] causes the controller to start monitoring this failure and to compare the wheel velocity with the vehicle velocity from next cycle. When its difference of -100g is continued for more than 140msec, controller recognize the failure. • In case that any sensor failure at other wheel was already detected, When the numbers of 100g at each wheel exceed 5 times, or When the numbers of 70g at each wheel exceed 20 times, controller recognize the failure. - The counter of speed jump is cleared every 30min. - This monitoring is performed for the period that the velocity of each wheel exceeds 2km/h.	
Fail Safe		1. Only one wheel failure : Inhibit the ABS/ESC control, allow the EBD control. The ABS/ESC warning lamps are activated, the EBD warning lamp is not activated. 2. More than two wheels failure : The ABS/EBD/ESC	

	functions are inhibited. The ABS/EBD/ESC warning lamps are activated.	

Specification

Sensor Type	Output Voltage		Airgap
	HIGH	LOW	
Active Type	1.18~1.68V	0.59~0.84V	0.4~1.5mm

Diagnostic Circuit Diagram

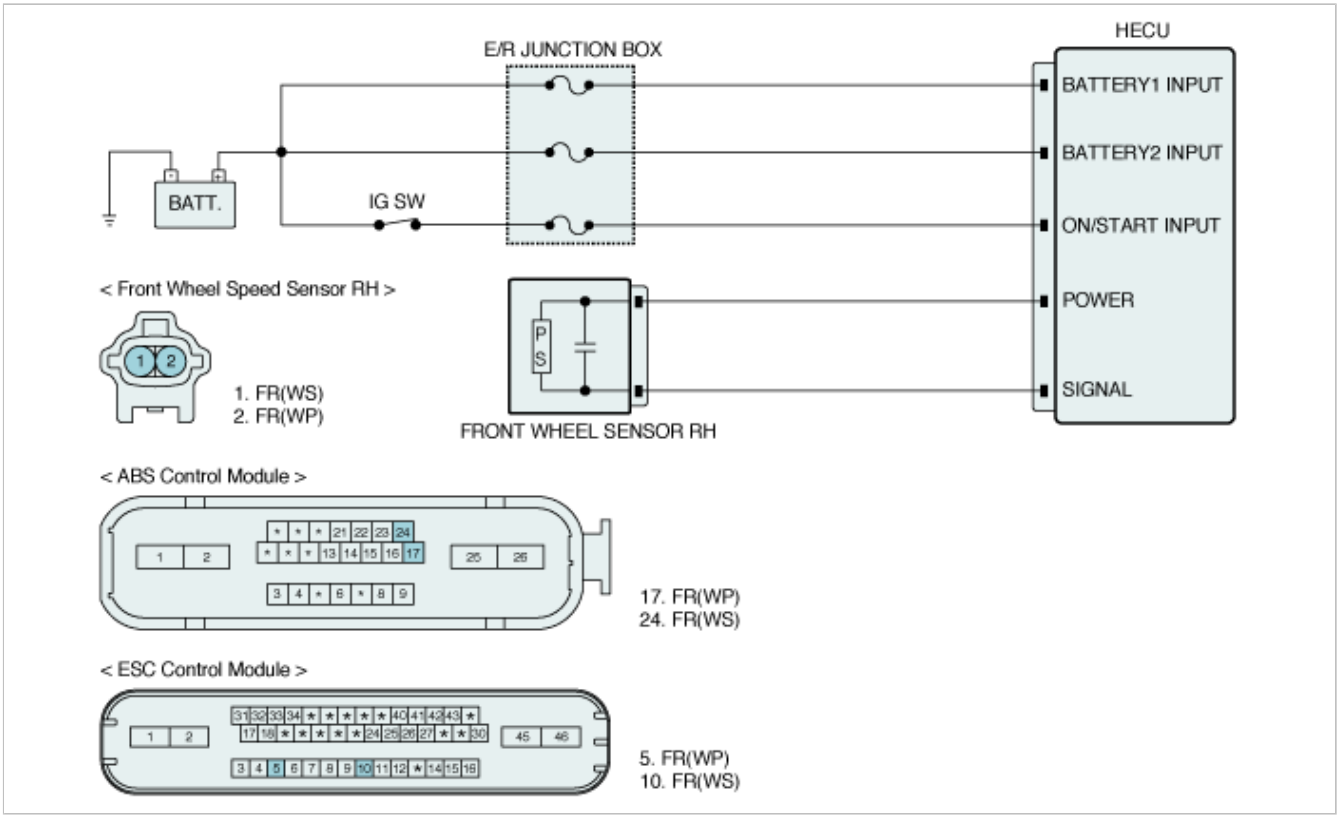

Signal Waveform & Data

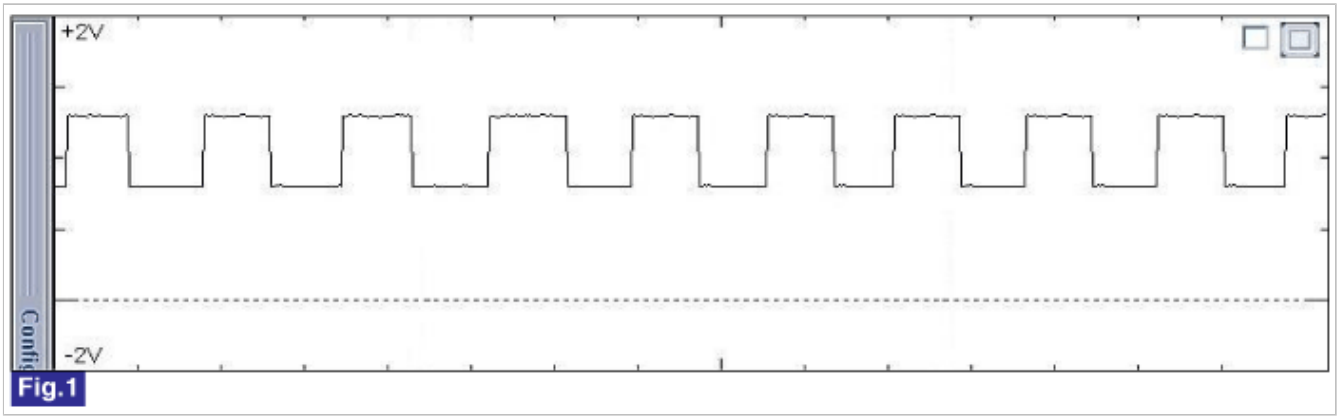

Fig 1) Normal waveform of wheel speed sensor (Active type)
- High : Approx. 1.4V, Low : Approx. 0.7V0.59~0.84V

Monitor Scantool Data

1. Ignition "ON" & Engine "ON".
2. Connect scantool to Data Link Connector(DLC)

3. Start and drive vehicle in gear and maintain vehicle speed at or above 40km/h. (24mph)
4. Monitor the "WHEEL SPEED(FR)" parameter on the Scantool.

Specification :
Compare with other parameters related to wheel speed sensor.
If it is the same as other parameters, it is in normal condition.

5. Is parameter displayed within specifications?

YES	▸ Fault is intermittent caused by poor connection in wheel speed sensor harness (FR) and/or HECU's connector or was repaired and HECU memory was not cleared. Thoroughly check connectors for looseness, poor connection, bending, corrosion, contamination, deterioration, or damage. Repair or replace as necessary and then go to "Verification of Vehicle Repair" procedure.
NO	▸ Go to "Component Inspection" Procedure.

Component Inspection

■ **Wheel speed sensor circuit check**

1. Lift the vehicle.
2. Ignition "ON" & Engine "OFF".
3. Turn the wheel by hand.
4. Measure waveform between signal terminal of the wheel speed sensor harness connector and chassis ground with osciloscope.

Specification : High : 1.18~1.68V , Low : 0.59~0.84V

5. Is the measured waveform within specifications?

YES	▸ Fault is intermittent caused by faulty HECU, wheel speed sensor or external noise, an interference between harnesses, was repaired and HECU memory was not cleared. Thoroughly check connectors for looseness, poor connection, bending, corrosion, contamination, deterioration, or damage. Repair as necessary and then go to "Verification of Vehicle Repair" procedure. If there is no problem in signal circuit, Substitute with a known-good HECU and check for proper operation. If problem is corrected, replace HECU and then go to "Verification of Vehicle Repair" procedure.
NO	▸ Check for improper installation of wheel speed sensor. If NG, repair as necessary and then go to "Verification of vehicle Repair" procedure. Check for damage of rotor teeth or wheel bearing. If NG, repair as necessary and then go to "Verification of vehicle Repair" procedure. Substitute with a known-good Wheel speed sensor and check for proper operation. If problem is corrected, replace Wheel speed sensor and then go to "Verification of Vehicle Repair" procedure.

Verification of Vehicle Repair

After a repair, it is essential to verify that the fault has been corrected.

1. Connect scantool and select "Diagnostic Trouble Codes(DTCs)" mode.
2. Using a scantool, Clear DTC.
3. Operate the vehicle within DTC Detecting Condition in General Information. (Start and drive vehicle in gear and maintain vehicle speed at or above 40kmh. (24mph))
4. Using a scantool, Check DTC present.
5. Are any DTCs present ?

YES	▸ Go to the applicable troubleshooting procedure.
NO	▸ System performing to specification at this time.

General Description

The wheel speed sensor is the essential component the ABS ECU uses to calculate vehicle speed and to determine whether wheel lock occurs.
For example, rear wheel speed signal is used as a referecnce value, for vehicle speed, in front wheel drive vehicles, and if a difference between front and rear wheel speed occurs, then ABS control is performed.
Wheel speed sensor is active hall-sensor type.

DTC Description

The ABS ECU monitors the wheel speed sensor signal continuously.
This code is set when the sensor air gap is out of specified range or when the ABS control cycle is continued abnormally.
The HECU checks for air gap malfunctioning by monitoring the sensor signal at speeds between 2Km/h to 10 Km/h.
Warning lamp is turned OFF unless additional faults are detected when the IG KEY is turned ON again, and wheel speed is more than 10 Km/h (6.2mph).

DTC Detecting Condition

Item		Detecting Condition	Possible cause
DTC Strategy		• Signal monitoring	• Improper installation of wheel speed sensor • Abnormal Rotor and wheel bearing • Faulty Wheel speed sensor
Case1 (Large Air-Gap)	Enable Conditions	• When the minimum wheel velocity is 2km/h and the velocity of other wheels exceed 10km/h (6.2mph) with the acceleration of < 0.4g, the controller start comparing the velocity of other wheels except the min. wheel. if their difference below 4km/h (2.5mph) is continued for 140msec, Otherwise, if their difference beyond 4km/h (2.5mph) or >0.4g is continued for 2 minutes. • In < 0.4g, when the velocity of more two wheels is 2km/h (1.2mph) and the max. wheel velocity exceeds 10km/h (6.2mph), the condition is continued for 20 sec. Otherwise, In >0.4g, the condition is 2 minutes. • After velocity of 4 wheel exceeds 10km/h (6.2mph), when velocity of 1 wheel or 2 wheel is 2km/h (1.2mph) and difference of other 2 wheel velocity is less than 4km/h (2.5mph) under that those velocity is more than 10km/h (6.2mph), if that conditions are continued for 12 seconds. - This monitoring is performed for the period that the minimum velocity rises from 2km/h (1.2mph) to 10km/h (6.2mph).	
Case2 (long term ABS mode)	Enable Conditions	• During the ABS control cycle, if the wheel velocity of 2km/h (1.2mph) is lasted for more than 12sec. • If the ABS control cycle is continued for more than 36 sec.	
Fail Safe		1. Only one wheel failure : Inhibit the ABS/ESC control, allow the EBD control. The ABS/ESC warning lamps are activated, the EBD warning lamp is not activated. 2. More than two wheels failure : The ABS/EBD/ESC functions are inhibited. The ABS/EBD/ESC warning lamps are activated.	

Specification

Sensor Type	Output Voltage		Airgap
	HIGH	LOW	
Active Type	1.18~1.68V	0.59~0.84V	0.4~1.5mm

Diagnostic Circuit Diagram

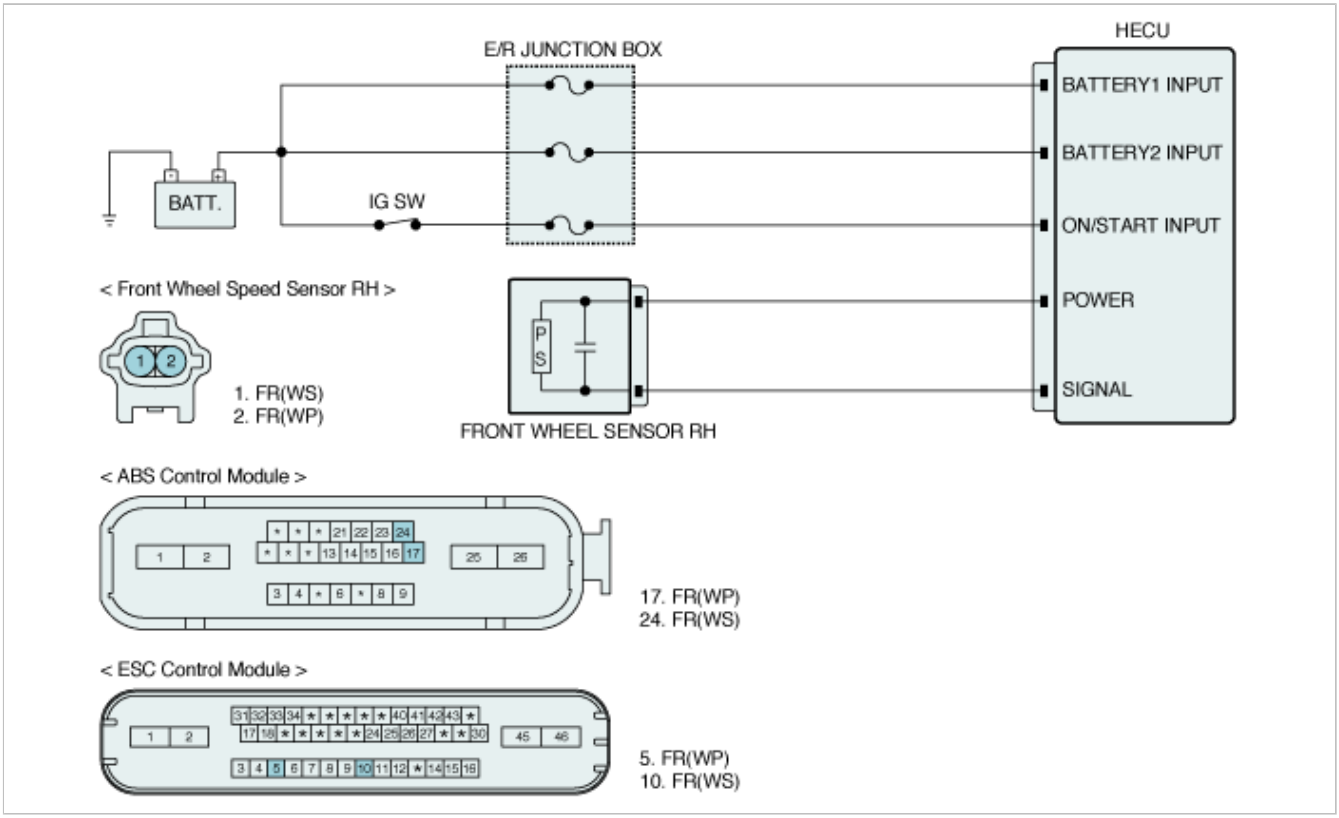

Signal Waveform & Data

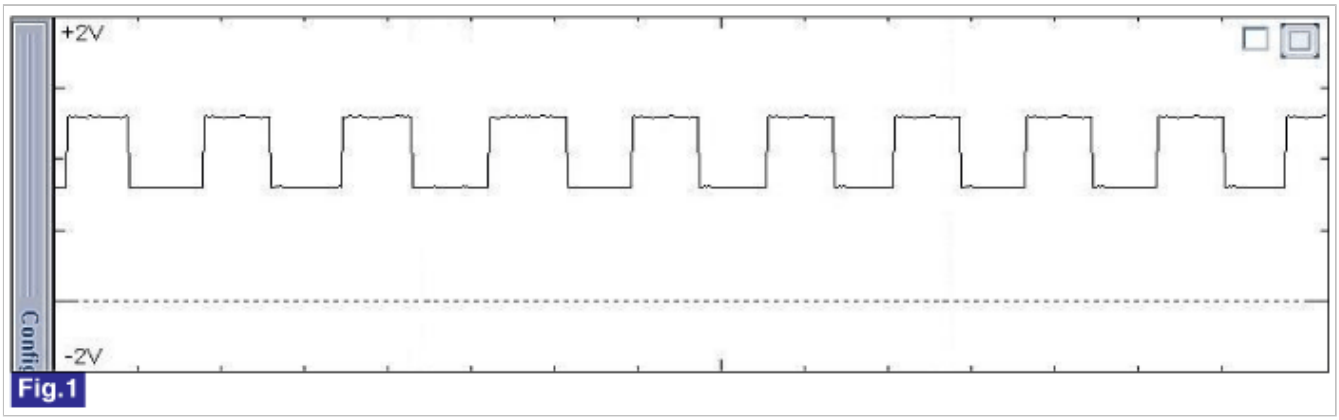

Fig 1) Normal waveform of wheel speed sensor (Active type)
- High : Approx. 1.4V, Low : Approx. 0.7V

Monitor Scantool Data

1. Ignition "ON" & Engine "ON".
2. Connect scantool to Data Link Connector(DLC)
3. Start and drive vehicle in gear and maintain vehicle speed at or above 10km/h. (6.2mph)
4. Monitor the "WHEEL SPEED(FR)" parameter on the Scantool.

Specification :
Compare with other parameters related to wheel speed sensor.
If it is the same as other parameters, it is in normal condition.

5. Is parameter displayed within specifications?

YES	▸ Fault is intermittent caused by poor connection in wheel speed sensor harness (FR) and/or HECU's connector or was repaired and HECU memory was not cleared. Thoroughly check connectors for looseness, poor connection, bending, corrosion, contamination, deterioration, or damage. Repair or replace as necessary and then go to "Verification of Vehicle Repair" procedure.
NO	▸ Go to "Component Inspection" Procedure.

Component Inspection

■ **Wheel speed sensor circuit check**

1. Lift the vehicle.
2. Ignition "ON" & Engine "OFF".
3. Turn the wheel by hand.
4. Measure waveform between signal terminal of the wheel speed sensor harness connector and chassis ground with osciloscope.

Specification : High : 1.18~1.68V , Low : 0.59~0.84V

5. Is the measured waveform within specifications?

YES	▸ Substitute with a known-good HECU and check for proper operation. If problem is corrected, replace HECU and then go to"Verification of Vehicle Repair" procedure.
NO	▸ Check for improper installation of wheel speed sensor. If NG, repair as necessary and then go to "Verification of vehicle Repair" procedure. Check for damage of rotor teeth or wheel bearing. If NG, repair as necessary and then go to "Verification of vehicle Repair" procedure. Substitute with a known-good Wheel speed sensor and check for proper operation. If problem is corrected, replace Wheel speed sensor and then go to "Verification of Vehicle Repair" procedure.

Verification of Vehicle Repair

After a repair, it is essential to verify that the fault has been corrected.

1. Connect scantool and select "Diagnostic Trouble Codes(DTCs)" mode.
2. Using a scantool, Clear DTC.
3. Operate the vehicle within DTC Detecting Condition in General Information. (Start and drive vehicle in gear and maintain vehicle speed at or above 10kmh. (6.2mph))
4. Using a scantool, Check DTC present.
5. Are any DTCs present ?

YES	▸ Go to the applicable troubleshooting procedure.
NO	▸ System performing to specification at this time.

General Description

The wheel speed sensor is the essential component the ABS ECU uses to calculate vehicle speed and to determine whether wheel lock occurs.
For example, rear wheel speed signal is used as a referecnce value, for vehicle speed, in front wheel drive vehicles, and if a difference between front and rear wheel speed occurs, then ABS control is performed.
Wheel speed sensor is active hall-sensor type.

DTC Description

The ABS ECU monitors the wheel speed sensor circuit continuously.
If the sensor signal current is continuously out of the specified range for 140msec, then the HECU determines that the circuit is open/short, and sets this code.
Warning lamp is turned OFF unless additional faults are detected when the IG KEY is turned ON again, and wheel speed is more than 10 Km/h.

DTC Detecting Condition

Item	Detecting Condition	Possible cause
DTC Strategy	• Current Monitoring	• Open or short of Wheel speed sensor circuit • Faulty Wheel speed sensor
Enable Conditions	• When the sensor signal current is continuously out of the specified range of 4 mA ±10% ~ 22 mA ±10% for 140msec.	
Fail Safe	1. Only one wheel failure : Inhibit the ABS/ESC control, allow the EBD control. The ABS/ESC warning lamps are activated, the EBD warning lamp is not activated. 2. More than two wheels failure : The ABS/EBD/ESC functions are inhibited. The ABS/EBD/ESC warning lamps are activated.	

Specification

Sensor Type	Output Voltage		Airgap
	HIGH	LOW	
Active Type	1.18~1.68V	0.59~0.84V	0.4~1.5mm

Diagnostic Circuit Diagram

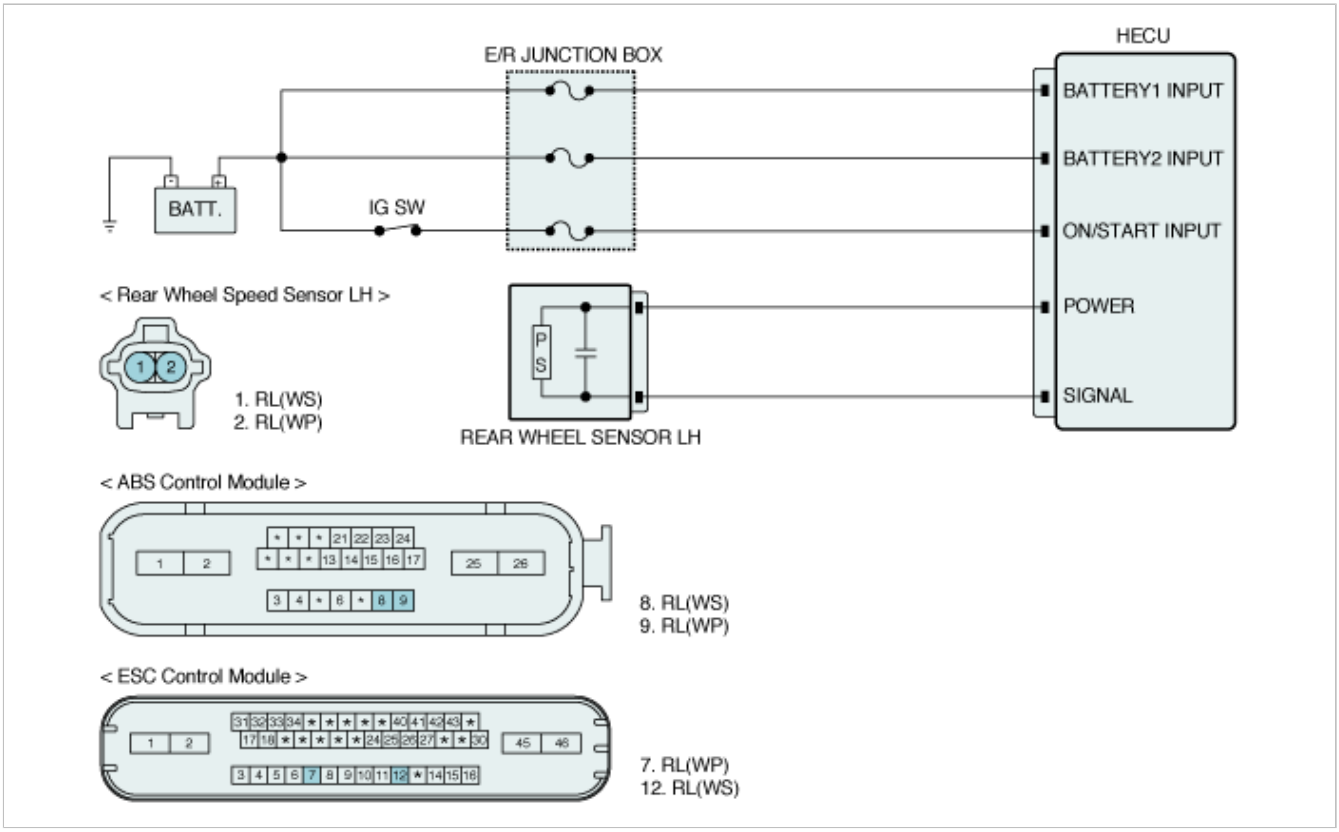

Signal Waveform & Data

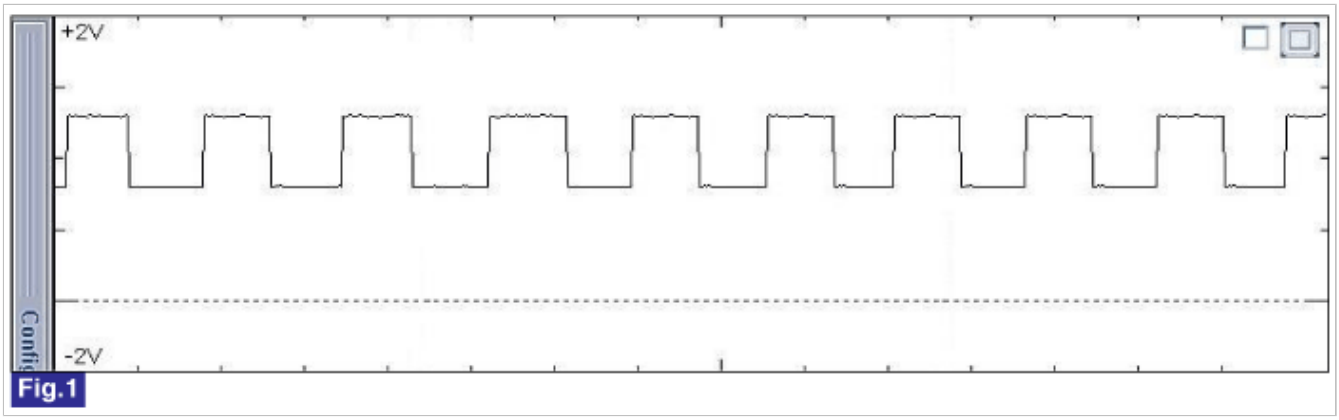

Fig 1) Normal waveform of wheel speed sensor (Active type)
- High : Approx. 1.4V, Low : Approx. 0.7V

Monitor Scantool Data

1. Ignition "ON" & Engine "ON".
2. Connect scantool to Data Link Connector(DLC)
3. Start and drive vehicle in gear and maintain vehicle speed at or above 10km/h. (6.2mph)
4. Monitor the "WHEEL SPEED(RL)" parameter on the Scantool.

Specification :
Compare with other parameters related to wheel speed sensor.
If it is the same as other parameters, it is in normal condition.

5. Is parameter displayed within specifications?

YES	▸ Fault is intermittent caused by poor connection in wheel speed sensor harness (RL) and/or HECU's connector or was repaired and HECU memory was not cleared.

	Thoroughly check connectors for looseness, poor connection, bending, corrosion, contamination, deterioration, or damage. Repair or replace as necessary and then go to "Verification of Vehicle Repair" procedure.
NO	▸ Go to "Terminal and Connector Inspection" procedure.

Terminal and Connector Inspection

1. Many malfunctions in the electrical system are caused by poor harness(es) and terminal condition. Faults can also be caused by interference from other electrical systems, and mechanical or chemical damage.
2. Thoroughly check connectors for looseness, poor connection, bending, corrosion, contamination, deterioration, or damage.
3. Has a problem been found?

YES	▸ Repair as necessary and then go to "Verification of Vehicle Repair" procedure.
NO	▸ Go to "Power Circuit Inspection" procedure.

Power Circuit Inspection

■ Open or Short Check

1. Ignition "ON" & Engine "OFF".
2. Measure voltage between power terminal of the wheel speed sensor harness connector and chassis ground.

Specification : Approx. B+

3. Is the measured value within specifications?

YES	▸ Go to "Signal Circuit Inspection" procedure.
NO	▸ Repair open or short in power circuit between HECU harness connector and wheel speed sensor harness connector and then go to "Verification of vehicle Repair" procedure. If there is no problem in Power circuit, Substitute with a known-good HECU and check for proper operation. If problem is corrected, replace HECU and then go to "Verification of Vehicle Repair" procedure.

Signal Circuit Inspection

■ Wheel speed sensor circuit check

1. Lift the vehicle.
2. Ignition "ON" & Engine "OFF".
3. Turn the wheel by hand.
4. Measure waveform between wheel speed sensor signal terminal of the HECU harness connector and chassis ground.

Specification : High : 1.18~1.68V , Low : 0.59~0.84V

5. Is the measured waveform within specifications?

YES	▸ Substitute with a known-good HECU and check for proper operation. If problem is corrected, replace HECU and then go to "Verification of Vehicle Repair" procedure.
NO	▸ Repair open or short in signal circuit between HECU harness connector and wheel speed sensor harness connector, and then go to "Verification of vehicle Repair" procedure. If there is no problem in signal circuit, go to "Component Inspection" procedure.

Component Inspection

■ **Wheel speed sensor circuit check**

1. Lift the vehicle.
2. Ignition "ON" & Engine "OFF".
3. Turn the wheel by hand.
4. Measure waveform between signal terminal of the wheel speed sensor harness connector and chassis ground with osciloscope.

Specification : High : 1.18~1.68V , Low : 0.59~0.84V

5. Is the measured waveform within specifications?

YES	▸ Fault is intermittent caused by poor connection in wheel speed sensor harness (RL). Go to "Verification of Vehicle Repair" procedure.
NO	▸ Substitute with a known-good Wheel speed sensor and check for proper operation. If problem is corrected, replace Wheel speed sensor and then go to "Verification of Vehicle Repair" procedure.

Verification of Vehicle Repair

After a repair, it is essential to verify that the fault has been corrected.

1. Connect scantool and select "Diagnostic Trouble Codes(DTCs)" mode.
2. Using a scantool, Clear DTC.
3. Operate the vehicle within DTC Detecting Condition in General Information. (Start and drive vehicle in gear and maintain vehicle speed at or above 10kmh. (6.2mph))
4. Using a scantool, Check DTC present.
5. Are any DTCs present ?

YES	▸ Go to the applicable troubleshooting procedure.
NO	▸ System performing to specification at this time.

General Description

The wheel speed sensor is the essential component the ABS ECU uses to calculate vehicle speed and to determine whether wheel lock occurs.
For example, rear wheel speed signal is used as a referecnce value, for vehicle speed, in front wheel drive vehicles, and if a difference between front and rear wheel speed occurs, then ABS control is performed.
Wheel speed sensor is active hall-sensor type.

DTC Description

The ABS ECU monitors the wheel speed sensor signal continuously.
This code is set if an abnormal speed change ratio is detected while the vehicle speed is more than 2Km/h.
Warning lamp is turned OFF unless additional faults are detected when the IG KEY is turned ON again, and wheel speed is more than 10 Km/h.

DTC Detecting Condition

Item		Detecting Condition	Possible cause
DTC Strategy		• Signal monitoring	• Improper installation of wheel speed sensor • Abnormal Rotor and wheel bearing • Faulty Wheel speed sensor
Enable Conditions	Case1	• Max. wheel velocity exceeds 20km/h and the wheel velocity is 40% of max. wheel velocity. if this condition is lasted for 2 minutes. • Max. wheel velocity exceeds 40km/h and the wheel velocity is 60% of max. wheel velocity. if this condition is lasted for 2 minutes.	
	Case2	• Controller counts the number of the wheel acceleration of 100g[(25km/h) for 7ms]. When the numbers at one wheel exceed 56 times, or When the numbers at more two wheels exceed 5 times, controller recognize the failure. • Controller counts the number of the wheel acceleration of 70g[(17.5km/h) for 7ms]. When the numbers at one wheel exceed 126 times, or When the numbers at more two wheels exceed 20 times, controller recognize the failure. • Controller counts the number of the wheel deceleration of -100g[(-25km/h) for 7ms]. When the numbers at each wheel exceed 56 times, controller recognize the failure. • The wheel deceleration of –100g[(-25km/h) for 7ms] causes the controller to start monitoring this failure and to compare the wheel velocity with the vehicle velocity from next cycle. When its difference of -100g is continued for more than 140msec, controller recognize the failure. • In case that any sensor failure at other wheel was already detected, When the numbers of 100g at each wheel exceed 5 times, or When the numbers of 70g at each wheel exceed 20 times, controller recognize the failure. - The counter of speed jump is cleared every 30min. - This monitoring is performed for the period that the velocity of each wheel exceeds 2km/h.	
Fail Safe		1. Only one wheel failure : Inhibit the ABS/ESC control, allow the EBD control. The ABS/ESC warning lamps are activated, the EBD warning lamp is not activated. 2. More than two wheels failure : The ABS/EBD/ESC	

	functions are inhibited. The ABS/EBD/ESC warning lamps are activated.	

Specification

Sensor Type	Output Voltage		Airgap
	HIGH	LOW	
Active Type	1.18~1.68V	0.59~0.84V	0.4~1.5mm

Diagnostic Circuit Diagram

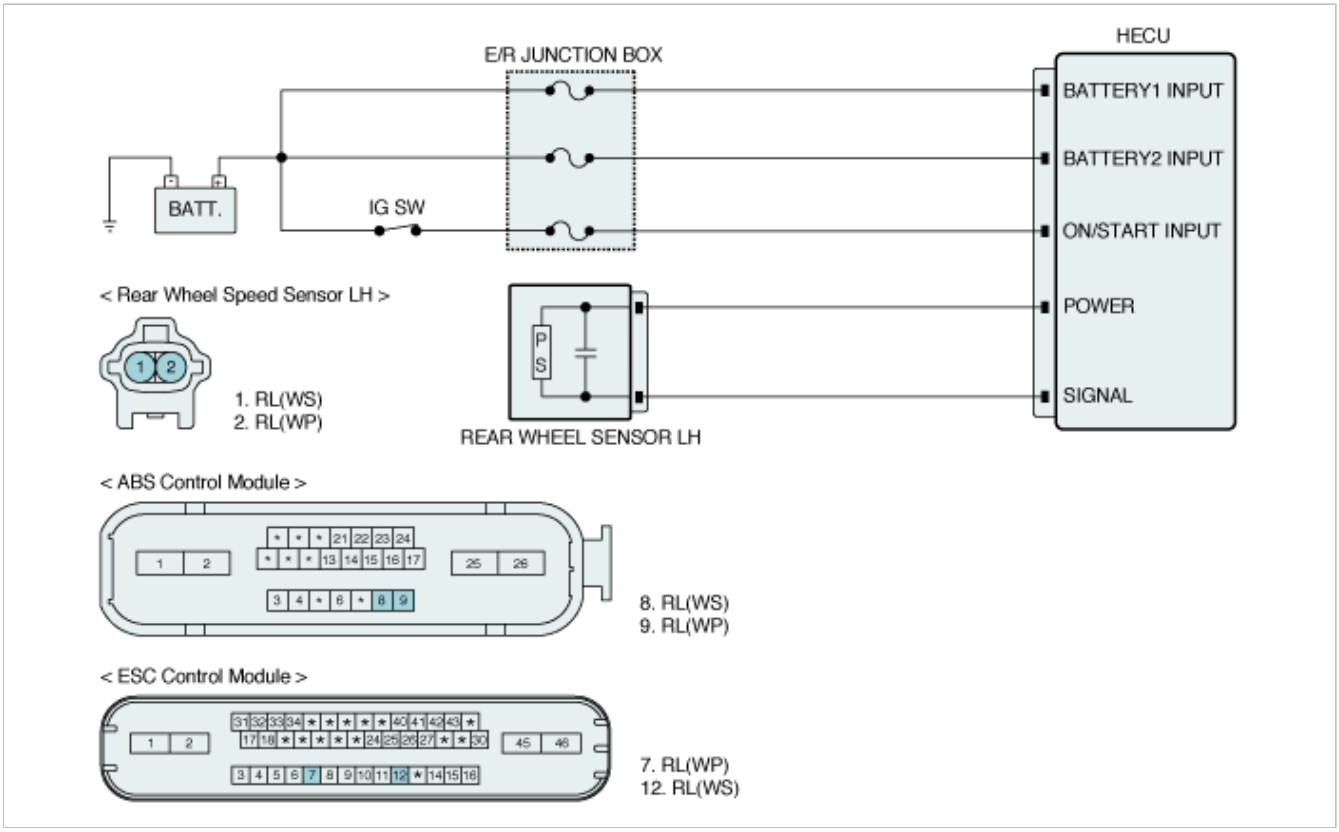

Signal Waveform & Data

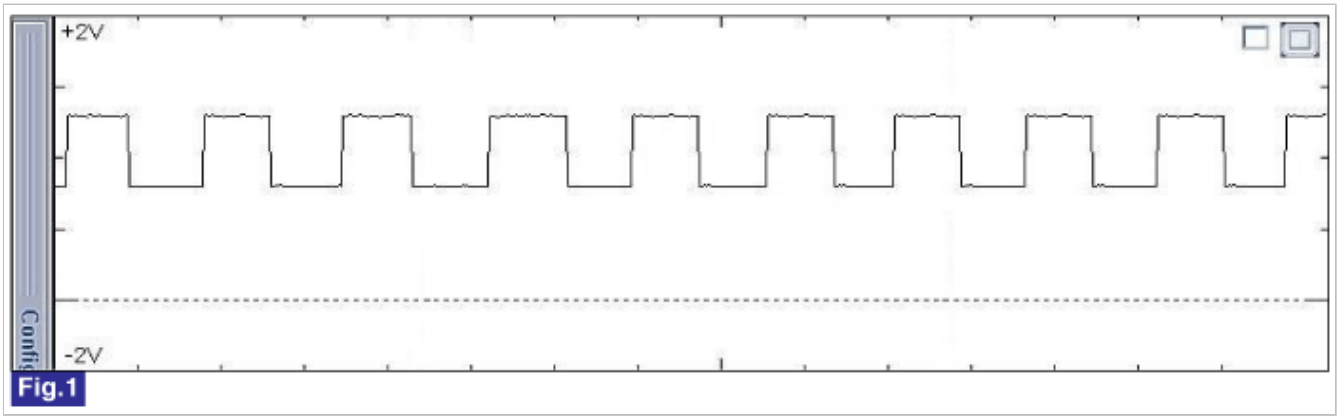

Fig 1) Normal waveform of wheel speed sensor (Active type)
- High : Approx. 1.4V, Low : Approx. 0.7V

Monitor Scantool Data

1. Ignition "ON" & Engine "ON".

2. Connect scantool to Data Link Connector(DLC)
3. Start and drive vehicle in gear and maintain vehicle speed at or above 40km/h. (24mph)
4. Monitor the "WHEEL SPEED(RL)" parameter on the Scantool.

Specification :
Compare with other parameters related to wheel speed sensor.
If it is the same as other parameters, it is in normal condition.

5. Is parameter displayed within specifications?

YES	▸ Fault is intermittent caused by poor connection in wheel speed sensor harness (RL) and/or HECU's connector or was repaired and HECU memory was not cleared. Thoroughly check connectors for looseness, poor connection, bending, corrosion, contamination, deterioration, or damage. Repair or replace as necessary and then go to "Verification of Vehicle Repair" procedure.
NO	▸ Go to "Component Inspection" Procedure.

Component Inspection

■ **Wheel speed sensor circuit check**

1. Lift the vehicle.
2. Ignition "ON" & Engine "OFF".
3. Turn the wheel by hand.
4. Measure waveform between signal terminal of the wheel speed sensor harness connector and chassis ground with osciloscope.

Specification : High : 1.18~1.68V , Low : 0.59~0.84V

5. Is the measured waveform within specifications?

YES	▸ Fault is intermittent caused by faulty HECU, wheel speed sensor or external noise, an interference between harnesses, was repaired and HECU memory was not cleared. Thoroughly check connectors for looseness, poor connection, bending, corrosion, contamination, deterioration, or damage. Repair as necessary and then go to "Verification of Vehicle Repair" procedure. If there is no problem in signal circuit, Substitute with a known-good HECU and check for proper operation. If problem is corrected, replace HECU and then go to "Verification of Vehicle Repair" procedure.
NO	▸ Check for improper installation of wheel speed sensor. If NG, repair as necessary and then go to "Verification of vehicle Repair" procedure. Check for damage of rotor teeth or wheel bearing. If NG, repair as necessary and then go to "Verification of vehicle Repair" procedure. Substitute with a known-good Wheel speed sensor and check for proper operation. If problem is corrected, replace Wheel speed sensor and then go to "Verification of Vehicle Repair" procedure.

Verification of Vehicle Repair

After a repair, it is essential to verify that the fault has been corrected.

1. Connect scantool and select "Diagnostic Trouble Codes(DTCs)" mode.
2. Using a scantool, Clear DTC.
3. Operate the vehicle within DTC Detecting Condition in General Information. (Start and drive vehicle in gear and maintain vehicle speed at or above 40kmh. (24mph))
4. Using a scantool, Check DTC present.

5. Are any DTCs present ?

YES	▶ Go to the applicable troubleshooting procedure.
NO	▶ System performing to specification at this time.

General Description

The wheel speed sensor is the essential component the ABS ECU uses to calculate vehicle speed and to determine whether wheel lock occurs.
For example, rear wheel speed signal is used as a referecnce value, for vehicle speed, in front wheel drive vehicles, and if a difference between front and rear wheel speed occurs, then ABS control is performed.
Wheel speed sensor is active hall-sensor type.

DTC Description

The ABS ECU monitors the wheel speed sensor signal continuously.
This code is set when the sensor air gap is out of specified range or when the ABS control cycle is continued abnormally.
The HECU checks for air gap malfunctioning by monitoring the sensor signal at speeds between 2Km/h to 10 Km/h.
Warning lamp is turned OFF unless additional faults are detected when the IG KEY is turned ON again, and wheel speed is more than 10 Km/h (6.2mph).

DTC Detecting Condition

Item		Detecting Condition	Possible cause
DTC Strategy		• Signal monitoring	• Improper installation of wheel speed sensor • Abnormal Rotor and wheel bearing • Faulty Wheel speed sensor
Case1 (Large Air-Gap)	Enable Conditions	• When the minimum wheel velocity is 2km/h and the velocity of other wheels exceed 10km/h (6.2mph) with the acceleration of < 0.4g, the controller start comparing the velocity of other wheels except the min. wheel. if their difference below 4km/h (2.5mph) is continued for 140msec, Otherwise, if their difference beyond 4km/h (2.5mph) or >0.4g is continued for 2 minutes. • In < 0.4g, when the velocity of more two wheels is 2km/h (1.2mph) and the max. wheel velocity exceeds 10km/h (6.2mph), the condition is continued for 20 sec. Otherwise, In >0.4g, the condition is 2 minutes. • After velocity of 4 wheel exceeds 10km/h (6.2mph), when velocity of 1 wheel or 2 wheel is 2km/h (1.2mph) and difference of other 2 wheel velocity is less than 4km/h (2.5mph) under that those velocity is more than 10km/h (6.2mph), if that conditions are continued for 12 seconds. - This monitoring is performed for the period that the minimum velocity rises from 2km/h (1.2mph) to 10km/h (6.2mph).	
Case2 (long term ABS mode)	Enable Conditions	• During the ABS control cycle, if the wheel velocity of 2km/h (1.2mph) is lasted for more than 12sec. • If the ABS control cycle is continued for more than 36 sec.	
Fail Safe		1. Only one wheel failure : Inhibit the ABS/ESC control, allow the EBD control. The ABS/ESC warning lamps are activated, the EBD warning lamp is not activated. 2. More than two wheels failure : The ABS/EBD/ESC functions are inhibited. The ABS/EBD/ESC warning lamps are activated.	

Specification

Sensor Type	Output Voltage		Airgap
	HIGH	LOW	

Active Type	1.18~1.68V	0.59~0.84V	0.4~1.5mm

Diagnostic Circuit Diagram

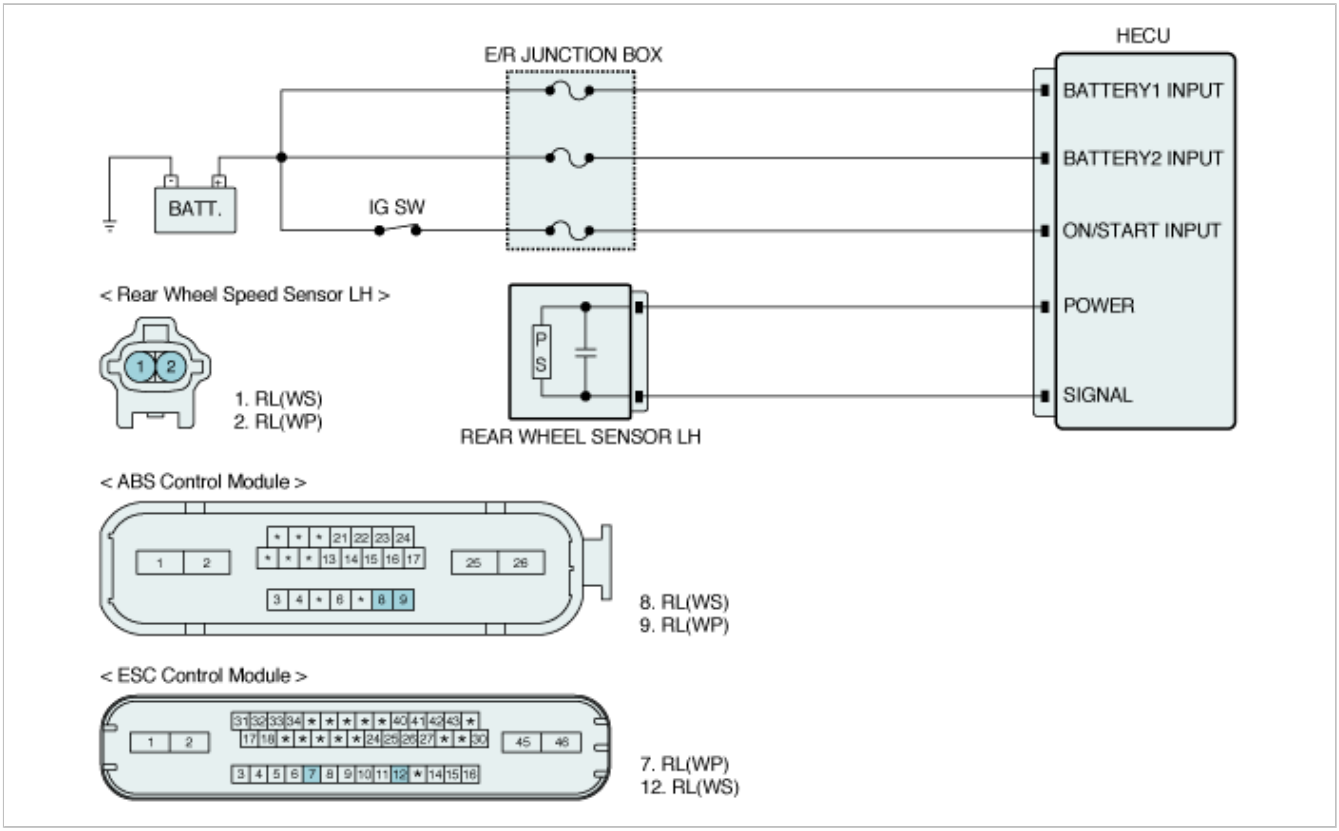

Signal Waveform & Data

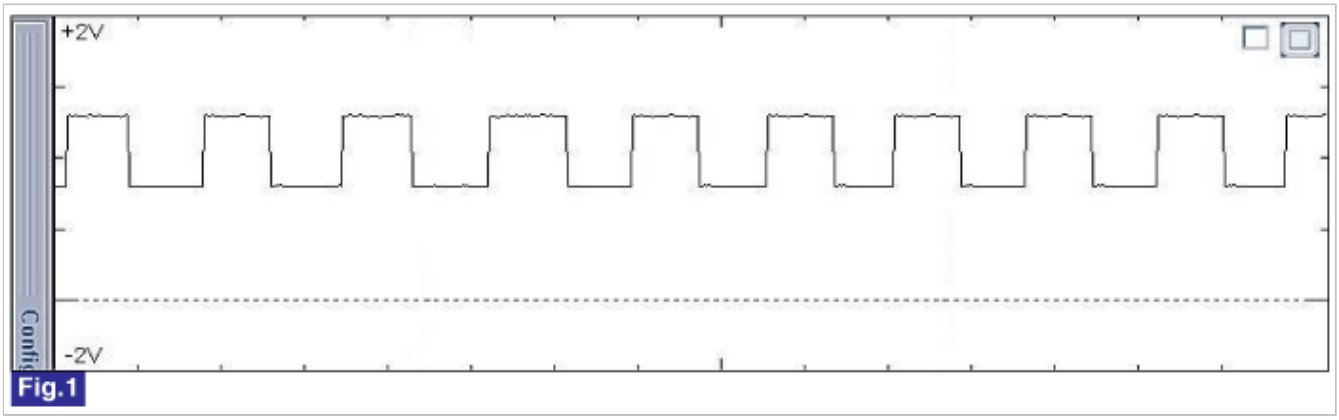

Fig 1) Normal waveform of wheel speed sensor (Active type)
- High : Approx. 1.4V, Low : Approx. 0.7V

Monitor Scantool Data

1. Ignition "ON" & Engine "ON".
2. Connect scantool to Data Link Connector(DLC)
3. Start and drive vehicle in gear and maintain vehicle speed at or above 10km/h. (6.2mph)
4. Monitor the "WHEEL SPEED(RL)" parameter on the Scantool.

Specification :
Compare with other parameters related to wheel speed sensor.
If it is the same as other parameters, it is in normal condition.

5. Is parameter displayed within specifications?

YES	▸ Fault is intermittent caused by poor connection in wheel speed sensor harness (RL) and/or HECU's connector or was repaired and HECU memory was not cleared. Thoroughly check connectors for looseness, poor connection, bending, corrosion, contamination, deterioration, or damage. Repair or replace as necessary and then go to "Verification of Vehicle Repair" procedure.
NO	▸ Go to "Component Inspection" Procedure.

Component Inspection

■ Wheel speed sensor circuit check

1. Lift the vehicle.
2. Ignition "ON" & Engine "OFF".
3. Turn the wheel by hand.
4. Measure waveform between signal terminal of the wheel speed sensor harness connector and chassis ground with osciloscope.

Specification : High : 1.18~1.68V , Low : 0.59~0.84V

5. Is the measured waveform within specifications?

YES	▸ Substitute with a known-good HECU and check for proper operation. If problem is corrected, replace HECU and then go to "Verification of Vehicle Repair"procedure.
NO	▸ Check for improper installation of wheel speed sensor. If NG, repair as necessary and then go to "Verification of vehicle Repair" procedure. Check for damage of rotor teeth or wheel bearing. If NG, repair as necessary and then go to "Verification of vehicle Repair" procedure. Substitute with a known-good Wheel speed sensor and check for proper operation. If problem is corrected, replace Wheel speed sensor and then go to "Verification of Vehicle Repair" procedure.

Verification of Vehicle Repair

After a repair, it is essential to verify that the fault has been corrected.

1. Connect scantool and select "Diagnostic Trouble Codes(DTCs)" mode.
2. Using a scantool, Clear DTC.
3. Operate the vehicle within DTC Detecting Condition in General Information. (Start and drive vehicle in gear and maintain vehicle speed at or above 10kmh. (6.2mph))
4. Using a scantool, Check DTC present.
5. Are any DTCs present ?

YES	▸ Go to the applicable troubleshooting procedure.
NO	▸ System performing to specification at this time.

General Description

The wheel speed sensor is the essential component the ABS ECU uses to calculate vehicle speed and to determine whether wheel lock occurs.
For example, rear wheel speed signal is used as a referecnce value, for vehicle speed, in front wheel drive vehicles, and if a difference between front and rear wheel speed occurs, then ABS control is performed.
Wheel speed sensor is active hall-sensor type.

DTC Description

The ABS ECU monitors the wheel speed sensor circuit continuously.
If the sensor signal current is continuously out of the specified range for 140msec, then the HECU determines that the circuit is open/short, and sets this code.
Warning lamp is turned OFF unless additional faults are detected when the IG KEY is turned ON again, and wheel speed is more than 10 Km/h.

DTC Detecting Condition

Item	Detecting Condition	Possible cause
DTC Strategy	• Current Monitoring	• Open or short of Wheel speed sensor circuit • Faulty Wheel speed sensor
Enable Conditions	• When the sensor signal current is continuously out of the specified range of 4 mA ±10% ~ 22 mA ±10% for 140msec.	
Fail Safe	1. Only one wheel failure : Inhibit the ABS/ESC control, allow the EBD control. The ABS/ESC warning lamps are activated, the EBD warning lamp is not activated. 2. More than two wheels failure : The ABS/EBD/ESC functions are inhibited. The ABS/EBD/ESC warning lamps are activated.	

Specification

Sensor Type	Output Voltage		Airgap
	HIGH	LOW	
Active Type	1.18~1.68V	0.59~0.84V	0.4~1.5mm

Diagnostic Circuit Diagram

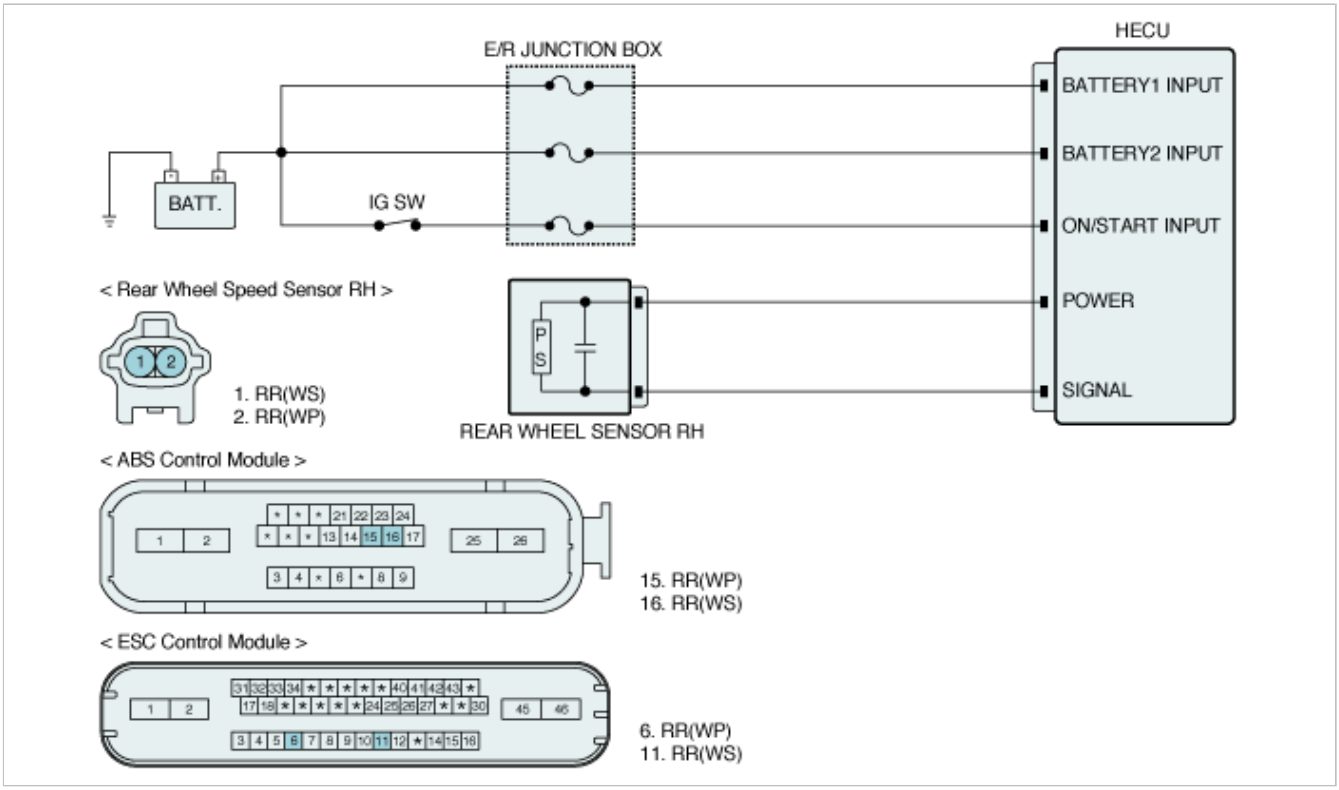

Signal Waveform & Data

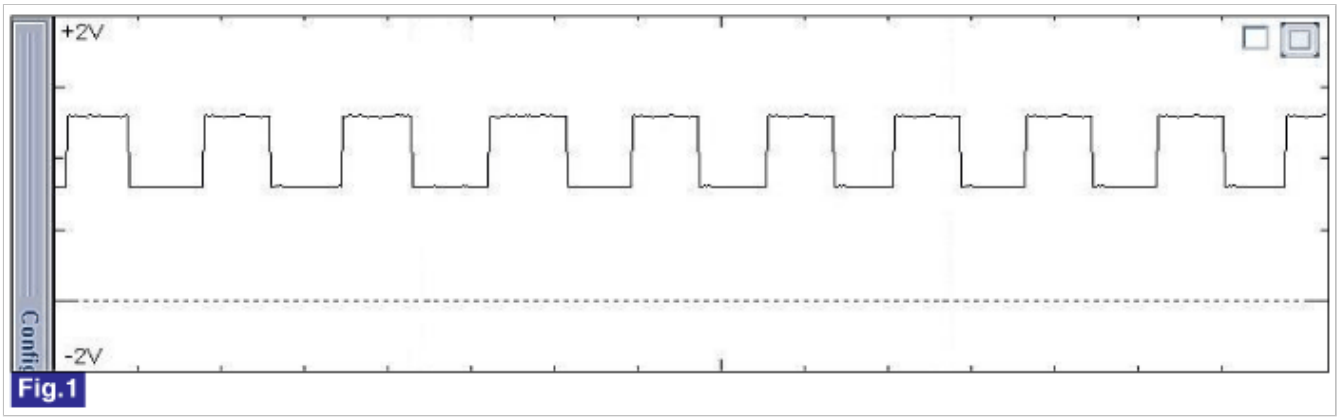

Fig 1) Normal waveform of wheel speed sensor (Active type)
- High : Approx. 1.4V, Low : Approx. 0.7V

Monitor Scantool Data

1. Ignition "ON" & Engine "ON".
2. Connect scantool to Data Link Connector(DLC)
3. Start and drive vehicle in gear and maintain vehicle speed at or above 10km/h. (6.2mph)
4. Monitor the "WHEEL SPEED(RR)" parameter on the Scantool.

Specification :
Compare with other parameters related to wheel speed sensor.
If it is the same as other parameters, it is in normal condition.

5. Is parameter displayed within specifications?

YES	▸ Fault is intermittent caused by poor connection in wheel speed sensor harness (RR) and/or HECU's connector or was repaired and HECU memory was not cleared. Thoroughly check connectors for looseness, poor connection, bending, corrosion, contamination,

	deterioration, or damage. Repair or replace as necessary and then go to "Verification of Vehicle Repair" procedure.
NO	▸ Go to "Terminal and Connector Inspection" procedure.

Terminal and Connector Inspection

1. Many malfunctions in the electrical system are caused by poor harness(es) and terminal condition. Faults can also be caused by interference from other electrical systems, and mechanical or chemical damage.
2. Thoroughly check connectors for looseness, poor connection, bending, corrosion, contamination, deterioration, or damage.
3. Has a problem been found?

YES	▸ Repair as necessary and then go to "Verification of Vehicle Repair" procedure.
NO	▸ Go to "Power Circuit Inspection" procedure.

Power Circuit Inspection

■ Open or Short Check

1. Ignition "ON" & Engine "OFF".
2. Measure voltage between power terminal of the wheel speed sensor harness connector and chassis ground.

Specification : Approx. B+

3. Is the measured value within specifications?

YES	▸ Go to "Signal Circuit Inspection" procedure.
NO	▸ Repair open or short in power circuit between HECU harness connector and wheel speed sensor harness connector and then go to "Verification of vehicle Repair" procedure. If there is no problem in Power circuit, Substitute with a known-good HECU and check for proper operation. If problem is corrected, replace HECU and then go to "Verification of Vehicle Repair" procedure.

Signal Circuit Inspection

■ Wheel speed sensor circuit check

1. Lift the vehicle.
2. Ignition "ON" & Engine "OFF".
3. Turn the wheel by hand.
4. Measure waveform between signal terminal of the wheel speed sensor harness connector and chassis ground with osciloscope.

Specification : High : 1.18~1.68V , Low : 0.59~0.84V

5. Is the measured waveform within specifications?

YES	▸ Substitute with a known-good HECU and check for proper operation. If problem is corrected, replace HECU and then go to "Verification of Vehicle Repair" procedure.
NO	▸ Repair open or short in signal circuit between HECU harness connector and wheel speed sensor harness connector, and then go to "Verification of vehicle Repair" procedure. If there is no problem in signal circuit, go to "Component Inspection" procedure.

Component Inspection

■ **Wheel speed sensor circuit check**

1. Lift the vehicle.
2. Ignition "ON" & Engine "OFF".
3. Turn the wheel by hand.
4. Measure waveform between signal terminal of the wheel speed sensor harness connector and chassis ground.

Specification : High : 1.18~1.68V , Low : 0.59~0.84V

5. Is the measured waveform within specifications?

YES	▸ Fault is intermittent caused by poor connection in wheel speed sensor harness (RR). Go to "Verification of Vehicle Repair" procedure.
NO	▸ Substitute with a known-good Wheel speed sensor and check for proper operation. If problem is corrected, replace Wheel speed sensor and then go to "Verification of Vehicle Repair" procedure.

Verification of Vehicle Repair

After a repair, it is essential to verify that the fault has been corrected.

1. Connect scantool and select "Diagnostic Trouble Codes(DTCs)" mode.
2. Using a scantool, Clear DTC.
3. Operate the vehicle within DTC Detecting Condition in General Information. (Start and drive vehicle in gear and maintain vehicle speed at or above 10kmh. (6.2mph))
4. Using a scantool, Check DTC present.
5. Are any DTCs present ?

YES	▸ Go to the applicable troubleshooting procedure.
NO	▸ System performing to specification at this time.

General Description

The wheel speed sensor is the essential component the ABS ECU uses to calculate vehicle speed and to determine whether wheel lock occurs.
For example, rear wheel speed signal is used as a referecnce value, for vehicle speed, in front wheel drive vehicles, and if a difference between front and rear wheel speed occurs, then ABS control is performed.
Wheel speed sensor is active hall-sensor type.

DTC Description

The ABS ECU monitors the wheel speed sensor signal continuously.
This code is set if an abnormal speed change ratio is detected while the vehicle speed is more than 2Km/h.
Warning lamp is turned OFF unless additional faults are detected when the IG KEY is turned ON again, and wheel speed is more than 10 Km/h.

DTC Detecting Condition

Item		Detecting Condition	Possible cause
DTC Strategy		• Signal monitoring	• Improper installation of wheel speed sensor • Abnormal Rotor and wheel bearing • Faulty Wheel speed sensor
Enable Conditions	Case1	• Max. wheel velocity exceeds 20km/h and the wheel velocity is 40% of max. wheel velocity. if this condition is lasted for 2 minutes. • Max. wheel velocity exceeds 40km/h and the wheel velocity is 60% of max. wheel velocity. if this condition is lasted for 2 minutes.	
	Case2	• Controller counts the number of the wheel acceleration of 100g[(25km/h) for 7ms]. When the numbers at one wheel exceed 56 times, or When the numbers at more two wheels exceed 5 times, controller recognize the failure. • Controller counts the number of the wheel acceleration of 70g[(17.5km/h) for 7ms]. When the numbers at one wheel exceed 126 times, or When the numbers at more two wheels exceed 20 times, controller recognize the failure. • Controller counts the number of the wheel deceleration of -100g[(-25km/h) for 7ms]. When the numbers at each wheel exceed 56 times, controller recognize the failure. • The wheel deceleration of –100g[(-25km/h) for 7ms] causes the controller to start monitoring this failure and to compare the wheel velocity with the vehicle velocity from next cycle. When its difference of -100g is continued for more than 140msec, controller recognize the failure. • In case that any sensor failure at other wheel was already detected, When the numbers of 100g at each wheel exceed 5 times, or When the numbers of 70g at each wheel exceed 20 times, controller recognize the failure. - The counter of speed jump is cleared every 30min. - This monitoring is performed for the period that the velocity of each wheel exceeds 2km/h.	
Fail Safe		1. Only one wheel failure : Inhibit the ABS/ESC control, allow the EBD control. The ABS/ESC warning lamps are activated, the EBD warning lamp is not activated. 2. More than two wheels failure : The ABS/EBD/ESC	

	functions are inhibited. The ABS/EBD/ESC warning lamps are activated.	

Specification

Sensor Type	Output Voltage		Airgap
	HIGH	LOW	
Active Type	1.18~1.68V	0.59~0.84V	0.4~1.5mm

Diagnostic Circuit Diagram

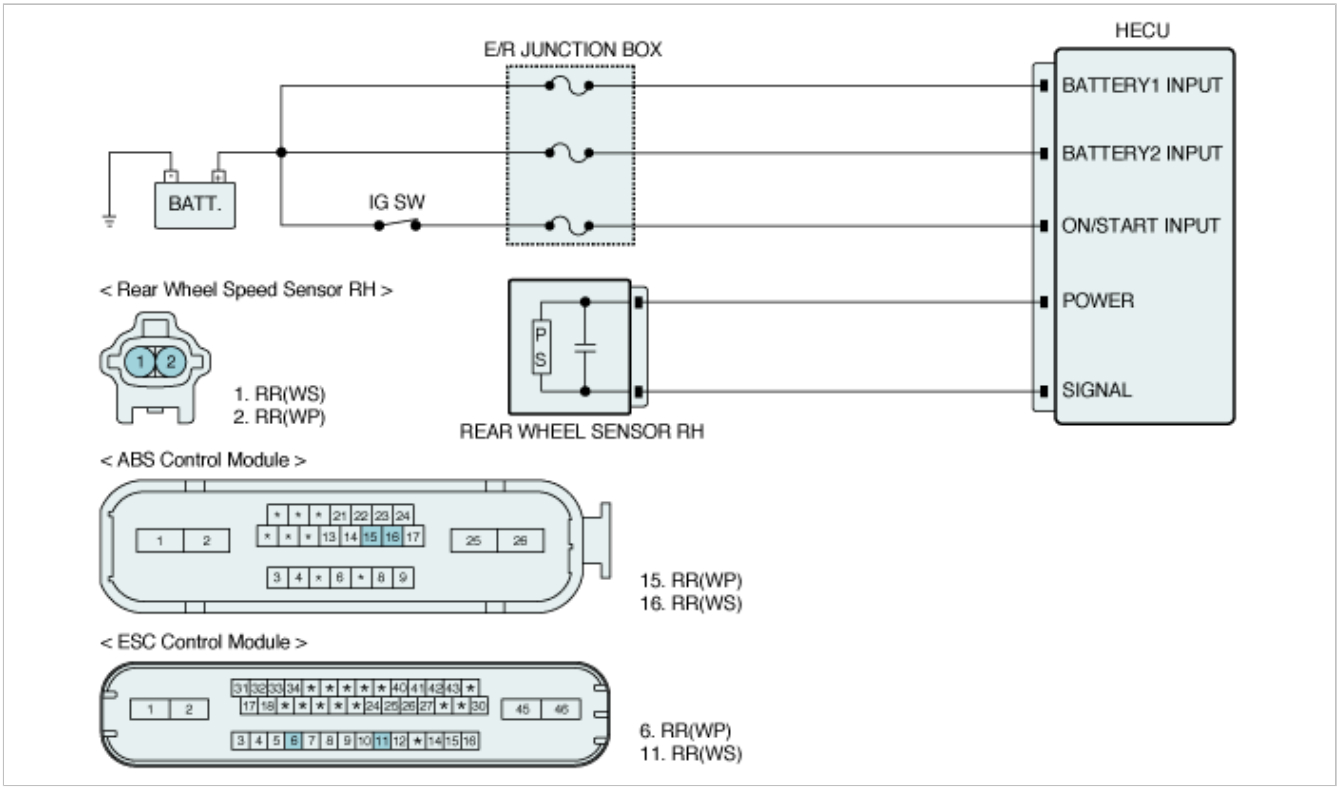

Signal Waveform & Data

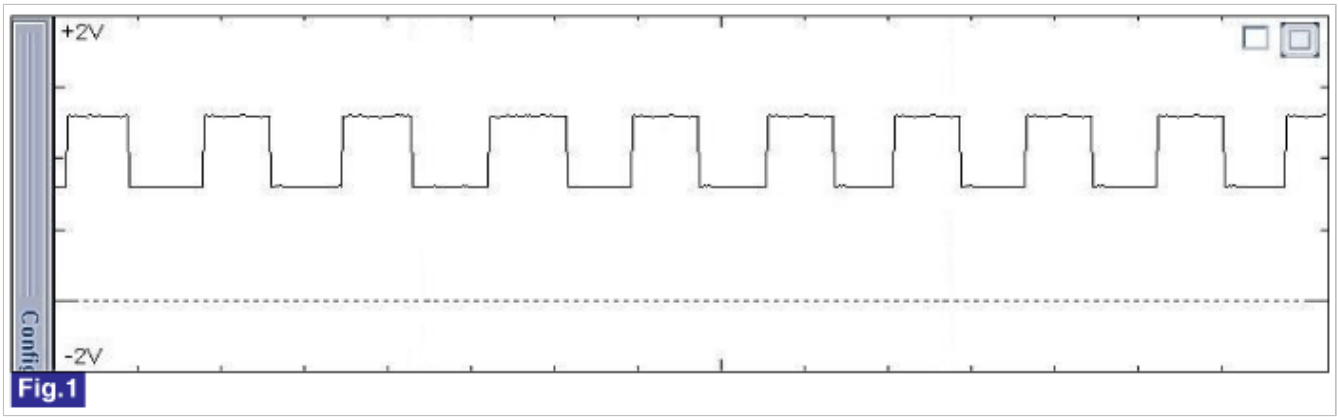

Fig 1) Normal waveform of wheel speed sensor (Active type)
- High : Approx. 1.4V, Low : Approx. 0.7V

Monitor Scantool Data

1. Ignition "ON" & Engine "ON".
2. Connect scantool to Data Link Connector(DLC)

3. Start and drive vehicle in gear and maintain vehicle speed at or above 40km/h. (24mph)
4. Monitor the "WHEEL SPEED(RR)" parameter on the Scantool.

Specification :
Compare with other parameters related to wheel speed sensor.
If it is the same as other parameters, it is in normal condition.

5. Is parameter displayed within specifications?

YES	▸ Fault is intermittent caused by poor connection in wheel speed sensor harness (RR) and/or HECU's connector or was repaired and HECU memory was not cleared. Thoroughly check connectors for looseness, poor connection, bending, corrosion, contamination, deterioration, or damage. Repair or replace as necessary and then go to "Verification of Vehicle Repair" procedure.
NO	▸ Go to "Component Inspection" Procedure.

Component Inspection

■ **Wheel speed sensor circuit check**

1. Lift the vehicle.
2. Ignition "ON" & Engine "OFF".
3. Turn the wheel by hand.
4. Measure waveform between signal terminal of the wheel speed sensor harness connector and chassis ground with osciloscope.

Specification : High : 1.18~1.68V , Low : 0.59~0.84V

5. Is the measured waveform within specifications?

YES	▸ Fault is intermittent caused by faulty HECU, wheel speed sensor or external noise, an interference between harnesses, was repaired and HECU memory was not cleared. Thoroughly check connectors for looseness, poor connection, bending, corrosion, contamination, deterioration, or damage. Repair as necessary and then go to "Verification of Vehicle Repair" procedure. If there is no problem in signal circuit, Substitute with a known-good HECU and check for proper operation. If problem is corrected, replace HECU and then go to "Verification of Vehicle Repair" procedure.
NO	▸ Check for improper installation of wheel speed sensor. If NG, repair as necessary and then go to "Verification of vehicle Repair" procedure. Check for damage of rotor teeth or wheel bearing. If NG, repair as necessary and then go to "Verification of vehicle Repair" procedure. Substitute with a known-good Wheel speed sensor and check for proper operation. If problem is corrected, replace Wheel speed sensor and then go to "Verification of Vehicle Repair" procedure.

Verification of Vehicle Repair

After a repair, it is essential to verify that the fault has been corrected.

1. Connect scantool and select "Diagnostic Trouble Codes(DTCs)" mode.
2. Using a scantool, Clear DTC.
3. Operate the vehicle within DTC Detecting Condition in General Information. (Start and drive vehicle in gear and maintain vehicle speed at or above 40kmh. (24mph))
4. Using a scantool, Check DTC present.
5. Are any DTCs present ?

YES	▸ Go to the applicable troubleshooting procedure.
NO	▸ System performing to specification at this time.

General Description

The wheel speed sensor is the essential component the ABS ECU uses to calculate vehicle speed and to determine whether wheel lock occurs.
For example, rear wheel speed signal is used as a referecnce value, for vehicle speed, in front wheel drive vehicles, and if a difference between front and rear wheel speed occurs, then ABS control is performed.
Wheel speed sensor is active hall-sensor type.

DTC Description

The ABS ECU monitors the wheel speed sensor signal continuously.
This code is set when the sensor air gap is out of specified range or when the ABS control cycle is continued abnormally.
The HECU checks for air gap malfunctioning by monitoring the sensor signal at speeds between 2Km/h to 10 Km/h.
Warning lamp is turned OFF unless additional faults are detected when the IG KEY is turned ON again, and wheel speed is more than 10 Km/h (6.2mph).

DTC Detecting Condition

Item		Detecting Condition	Possible cause
DTC Strategy		• Signal monitoring	• Improper installation of wheel speed sensor • Abnormal Rotor and wheel bearing • Faulty Wheel speed sensor
Case1 (Large Air-Gap)	Enable Conditions	• When the minimum wheel velocity is 2km/h and the velocity of other wheels exceed 10km/h (6.2mph) with the acceleration of < 0.4g, the controller start comparing the velocity of other wheels except the min. wheel. if their difference below 4km/h (2.5mph) is continued for 140msec, Otherwise, if their difference beyond 4km/h (2.5mph) or >0.4g is continued for 2 minutes. • In < 0.4g, when the velocity of more two wheels is 2km/h (1.2mph) and the max. wheel velocity exceeds 10km/h (6.2mph), the condition is continued for 20 sec. Otherwise, In >0.4g, the condition is 2 minutes. • After velocity of 4 wheel exceeds 10km/h (6.2mph), when velocity of 1 wheel or 2 wheel is 2km/h (1.2mph) and difference of other 2 wheel velocity is less than 4km/h (2.5mph) under that those velocity is more than 10km/h (6.2mph), if that conditions are continued for 12 seconds. - This monitoring is performed for the period that the minimum velocity rises from 2km/h (1.2mph) to 10km/h (6.2mph).	
Case2 (long term ABS mode)	Enable Conditions	• During the ABS control cycle, if the wheel velocity of 2km/h (1.2mph) is lasted for more than 12sec. • If the ABS control cycle is continued for more than 36 sec.	
Fail Safe		1. Only one wheel failure : Inhibit the ABS/ESC control, allow the EBD control. The ABS/ESC warning lamps are activated, the EBD warning lamp is not activated. 2. More than two wheels failure : The ABS/EBD/ESC functions are inhibited. The ABS/EBD/ESC warning lamps are activated.	

Specification

Sensor Type	Output Voltage		Airgap
	HIGH	LOW	

Active Type	1.18~1.68V	0.59~0.84V	0.4~1.5mm

Diagnostic Circuit Diagram

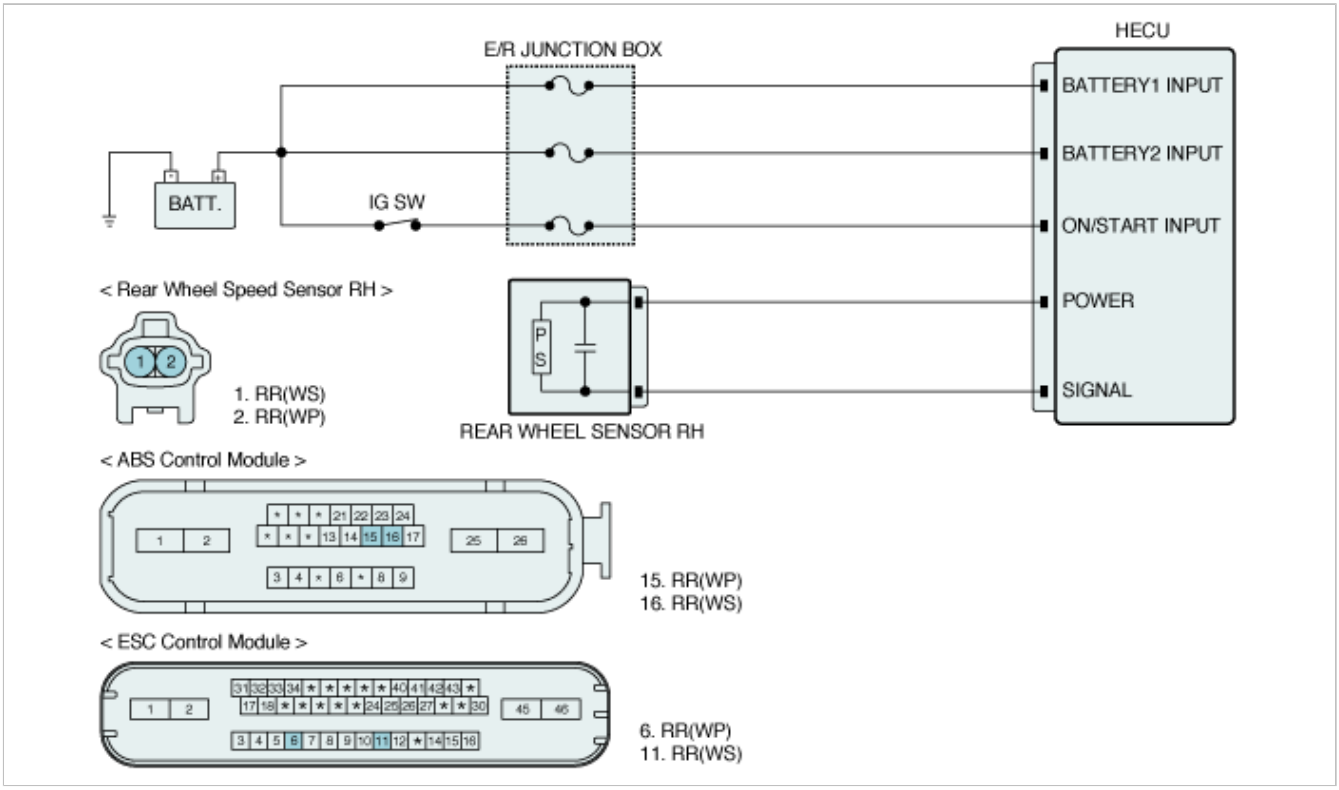

Signal Waveform & Data

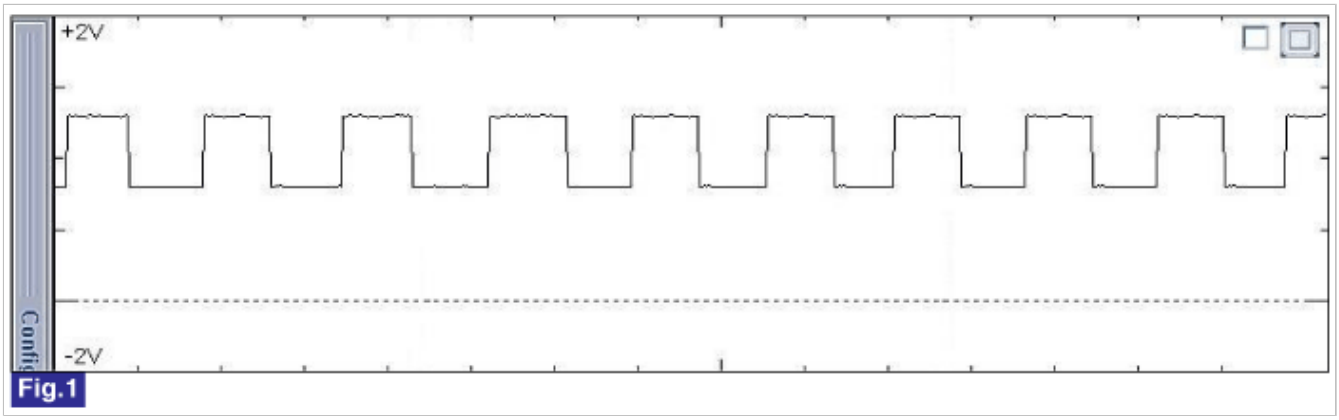

Fig 1) Normal waveform of wheel speed sensor (Active type)
- High : Approx. 1.4V,
- Low : Approx. 0.7V0.59~0.84V

Monitor Scantool Data

1. Ignition "ON" & Engine "ON".
2. Connect scantool to Data Link Connector(DLC)
3. Start and drive vehicle in gear and maintain vehicle speed at or above 10km/h. (6.2mph)
4. Monitor the "WHEEL SPEED(RR)" parameter on the Scantool.

Specification :
Compare with other parameters related to wheel speed sensor.
If it is the same as other parameters, it is in normal condition.

5. Is parameter displayed within specifications?

YES	▸ Fault is intermittent caused by poor connection in wheel speed sensor harness (RR) and/or HECU's connector or was repaired and HECU memory was not cleared. Thoroughly check connectors for looseness, poor connection, bending, corrosion, contamination, deterioration, or damage. Repair or replace as necessary and then go to "Verification of Vehicle Repair" procedure.
NO	▸ Go to "Component Inspection" Procedure.

Component Inspection

■ Wheel speed sensor circuit check

1. Lift the vehicle.
2. Ignition "ON" & Engine "OFF".
3. Turn the wheel by hand.
4. Measure waveform between signal terminal of the wheel speed sensor harness connector and chassis ground with osciloscope.

Specification : High : 1.18~1.68V , Low : 0.59~0.84V

5. Is the measured waveform within specifications?

YES	▸ Substitute with a known-good HECU and check for proper operation. If problem is corrected, replace HECU and then go to "Verification of Vehicle Repair"procedure.
NO	▸ Check for improper installation of wheel speed sensor. If NG, repair as necessary and then go to "Verification of vehicle Repair" procedure. Check for damage of rotor teeth or wheel bearing. If NG, repair as necessary and then go to "Verification of vehicle Repair" procedure. Substitute with a known-good Wheel speed sensor and check for proper operation. If problem is corrected, replace Wheel speed sensor and then go to "Verification of Vehicle Repair" procedure.

Verification of Vehicle Repair

After a repair, it is essential to verify that the fault has been corrected.

1. Connect scantool and select "Diagnostic Trouble Codes(DTCs)" mode.
2. Using a scantool, Clear DTC.
3. Operate the vehicle within DTC Detecting Condition in General Information. (Start and drive vehicle in gear and maintain vehicle speed at or above 10kmh. (6.2mph))
4. Using a scantool, Check DTC present.
5. Are any DTCs present ?

YES	▸ Go to the applicable troubleshooting procedure.
NO	▸ System performing to specification at this time.

General Description

The pressure sensor, installed in the HECU, sense the brake oil pressure to judge driver's brake intention when ESC is operating.
If pressure of master cyclinder is applied to pressure sensor, the strain of the piezo element is changed and then the resistance of brige circuit is chanded according to changed strain.
Therefore this changed resistance changes output voltage of brige circuit and output voltage changes linearly.
The sensor output is a analog signal in proportion to supply voltage, and the HECU recognizes a pressure value according to signal ratio about supply voltage.

DTC Description

A failure is detected if the output signal voltage of the pressure sensor is out of specified range.

DTC Detecting Condition

Item	Detecting Condition	Possible cause
DTC Strategy	• Voltage Monitoring	• Open or short of pressure sensor circuit • Faulty pressure sensor
Enable Conditions	• The output signal voltage of the pressure sensor is out of the specified range. - The monitoring starts 1sec after power up.	
Fail Safe	• Inhibit the ESC control and allow the ABS/EBD control. • The ESC warning lamp is activated.	

Diagnostic Circuit Diagram

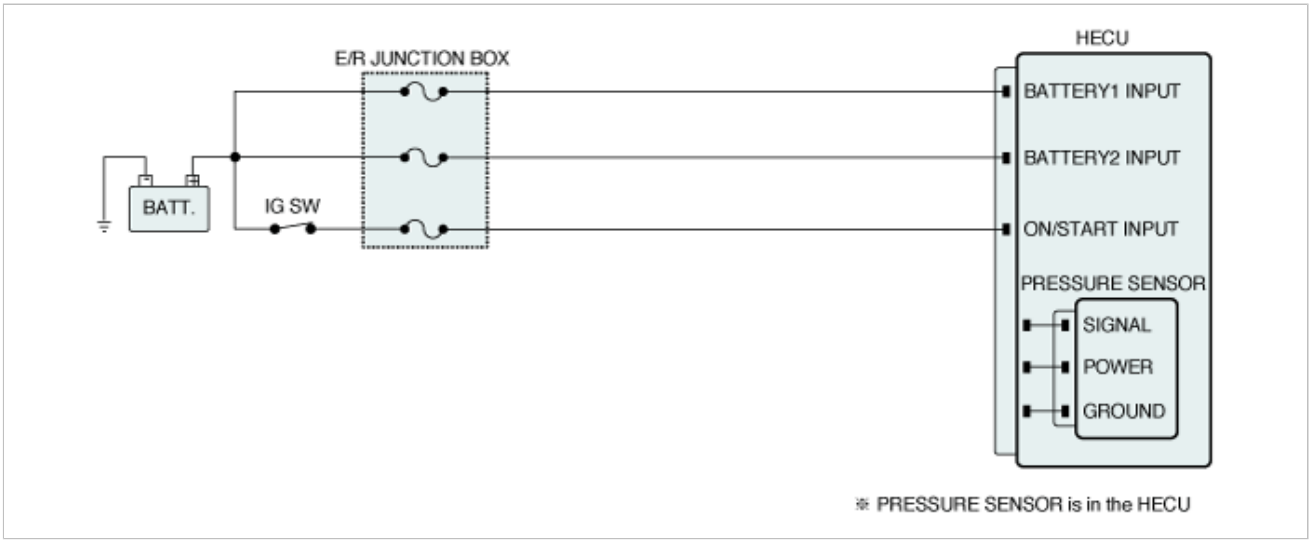

Monitor Scantool Data

1. Connect scantool to Data Link Connector(DLC).
2. Ignition "ON" & Engine "ON".
3. Press the brake pedal.
4. Monitor the "PRESSURE SENSOR" parameter on the Scantool.

Specification :
Approx. 60bar ~150bar (There is difference in displayed parameter according to braking force)

Sensor Name	Value	Ref. Min	Ref. Max	Unit	Test Condition
☑ Pressure Sensor - Positive	0.0			bar	-
☑ Pressure Sensor - Negative	0.0			bar	-

Fig.1

Sensor Name	Value	Ref. Min	Ref. Max	Unit	Test Condition
☑ Pressure Sensor - Positive	100.0			bar	-
☑ Pressure Sensor - Negative	100.0			bar	-

Fig.2

Fig 1) Normal data at not pressing the brake pedal
Fig 2) Normal data at pressing the brake pedal
(The pressure value can be different based on braking force)

5. Whenever brake pedal is pushed down, is the pressure sensor's scantool data changed?

YES	▸ Fault is caused by having been repaired and HECU memory was not cleared. Clear the DTC and then go to "Verification of Vehicle Repair" procedure.
NO	▸ Go to "Component Inspection" procedure.

Component Inspection

1. Ignition "OFF".
2. Ignition "ON" & Engine "OFF".
3. Connect scantool and select "Diagnostic Trouble Codes(DTCs)" mode.
4. Using a scantool, Clear DTC.
5. Select "Diagnostic Trouble Codes(DTCs)" mode again.
6. Are any DTCs present ?

YES	▸ Substitute with a known-good pressure sensor and check for proper operation. If problem is corrected, replace pressure sensor and then go to "Verification of Vehicle Repair" procedure.
NO	▸ This fault may be intermittently caused. Go to "Verification of Vehicle Repair" procedure.

Verification of Vehicle Repair

After a repair, it is essential to verify that the fault has been corrected.

1. Connect scantool and select "Diagnostic Trouble Codes(DTCs)" mode.
2. Using a scantool, Clear DTC.
3. Operate the vehicle within DTC Detecting Condition in General Information.
4. Using a scantool, Check DTC present.
5. Are any DTCs present ?

YES	▸ Go to the applicable troubleshooting procedure.
NO	▸ System performing to specification at this time.

General Description

The pressure sensor, installed in the HECU, sense the brake oil pressure to judge driver's brake intention when ESC is operating.
If pressure of master cyclinder is applied to pressure sensor, the strain of the piezo element is changed and then the resistance of brige circuit is chanded according to changed strain.
Therefore this changed resistance changes output voltage of brige circuit and output voltage changes linearly.
The sensor output is a analog signal in proportion to supply voltage, and the HECU recognizes a pressure value according to signal ratio about supply voltage.

DTC Description

The failure is detected if the pressure sensor signal noise is out of normal range, or the pressure sensor signal is changed abnormally.
In spite of no brake switch signal, master cylinder pressure exceeds 20bar when brake switch is normal.

DTC Detecting Condition

Item	Detecting Condition	Possible cause
DTC Strategy	• Voltage Monitoring	• External noise. • Faulty pressure sensor
Enable Conditions	• If input signal is noisy, Which the gradient of the sensor signal is larger than predefined value for specific times, ECU detect the failure. • Outside an ABS/ESC control, And after normal operation of BLS, If the pressure sensor signal is higher than 20bar and BLS is low for 3sec, ECU detect the failure.	
Fail Safe	• Inhibit the ESC control and allow the ABS/EBD control. • The ESC warning lamp is activated.	

Diagnostic Circuit Diagram

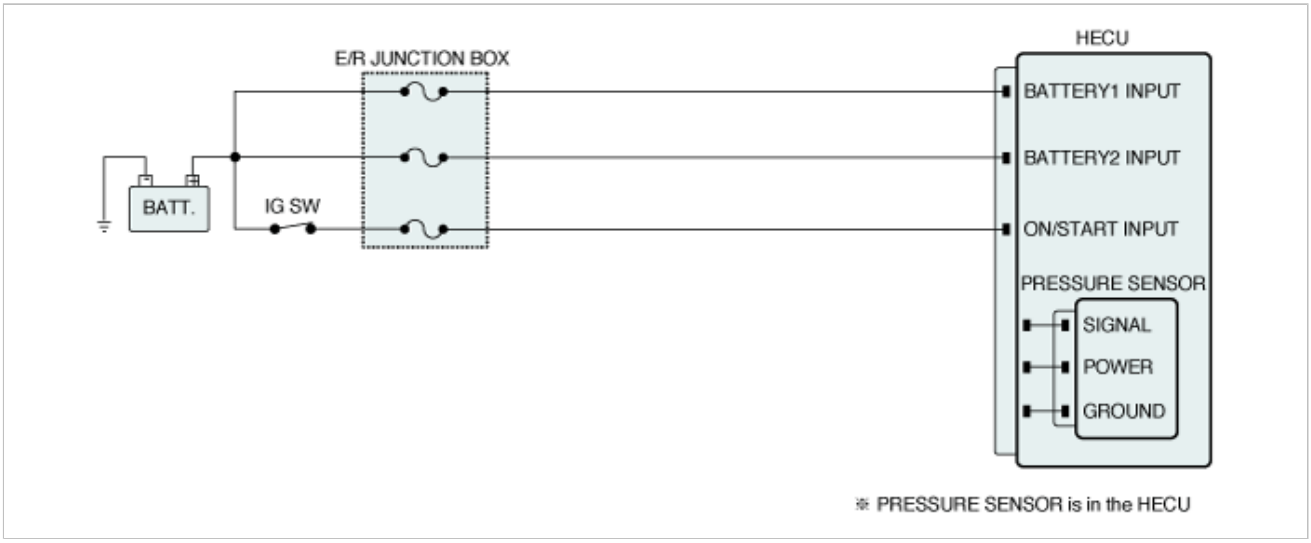

Monitor Scantool Data

1. Connect scantool to Data Link Connector(DLC).
2. Ignition "ON" & Engine "ON".
3. Press the brake pedal.
4. Monitor the "PRESSURE SENSOR" parameter on the Scantool.

Specification :
Approx. 60bar ~150bar (There is difference in displayed parameter according to braking force)

Sensor Name	Value	Ref. Min	Ref. Max	Unit	Test Condition
☑ Pressure Sensor - Positive	0.0			bar	-
☑ Pressure Sensor - Negative	0.0			bar	-

Fig.1

Sensor Name	Value	Ref. Min	Ref. Max	Unit	Test Condition
☑ Pressure Sensor - Positive	100.0			bar	-
☑ Pressure Sensor - Negative	100.0			bar	-

Fig.2

Fig 1) Normal data at not pressing the brake pedal
Fig 2) Normal data at pressing the brake pedal
(The pressure value can be different based on braking force)

5. Whenever brake pedal is pushed down, is the pressure sensor's scantool data changed?

YES	▸ Fault is caused by having been repaired and HECU memory was not cleared. Clear the DTC and then go to "Verification of Vehicle Repair" procedure.
NO	▸ Go to "Component Inspection" procedure.

Component Inspection

1. Ignition "OFF".
2. Ignition "ON" & Engine "OFF".
3. Connect scantool and select "Diagnostic Trouble Codes(DTCs)" mode.
4. Using a scantool, Clear DTC.
5. Select "Diagnostic Trouble Codes(DTCs)" mode again.
6. Are any DTCs present ?

YES	▸ Substitute with a known-good pressure sensor and check for proper operation. If problem is corrected, replace pressure sensor and then go to "Verification of Vehicle Repair" procedure.
NO	▸ This fault may be intermittently caused. Go to "Verification of Vehicle Repair" procedure.

Verification of Vehicle Repair

After a repair, it is essential to verify that the fault has been corrected.

1. Connect scantool and select "Diagnostic Trouble Codes(DTCs)" mode.
2. Using a scantool, Clear DTC.
3. Operate the vehicle within DTC Detecting Condition in General Information.
4. Using a scantool, Check DTC present.
5. Are any DTCs present ?

YES	▸ Go to the applicable troubleshooting procedure.
NO	▸ System performing to specification at this time.

General Description

The Steering wheel angle sensor uses two sensors (A-sensor and B-sensor) to determine the direction of the rotation.
The main components of each sensor are LED, photo transistor and slit plate.
The slit plate, which has 45 holes, is installed between LED and photo transistor, and generates signals if slit plate rotates according to the steering wheel rotation.
The sensor signals are generated by photo transistor which is driven whenever the light passes through the holes. The HECU detects operating speed and direction of the steering wheel by this input signal, and the signal is used to input signal for anti-roll control.

DTC Description

If some signal voltage stays in abnormal voltage range, the time is counted seperately.
And if the monitored time exceeds the specified min. fault duration, failure is detected.
The monitoring starts 1sec after Power Up.

DTC Detecting Condition

Item	Detecting Condition	Possible cause
DTC Strategy	• Voltage Monitoring	• Open or short of steering wheel sensor circuit • Faulty steering wheel sensor
Enable Conditions	• When Vsas >4.2±0.1V or Vsas<1.2±0.1V or 2.1±0.1V<Vsas<2.9±0.1V continue 1sec. - The monitoring starts 1sec after Power Up. ※ Vsas : Voltage of the steering angle sensor.	
Fail Safe	• Inhibit the ESC control and allow the ABS/EBD control. • The ESC warning lamp is activated.	

Diagnostic Circuit Diagram

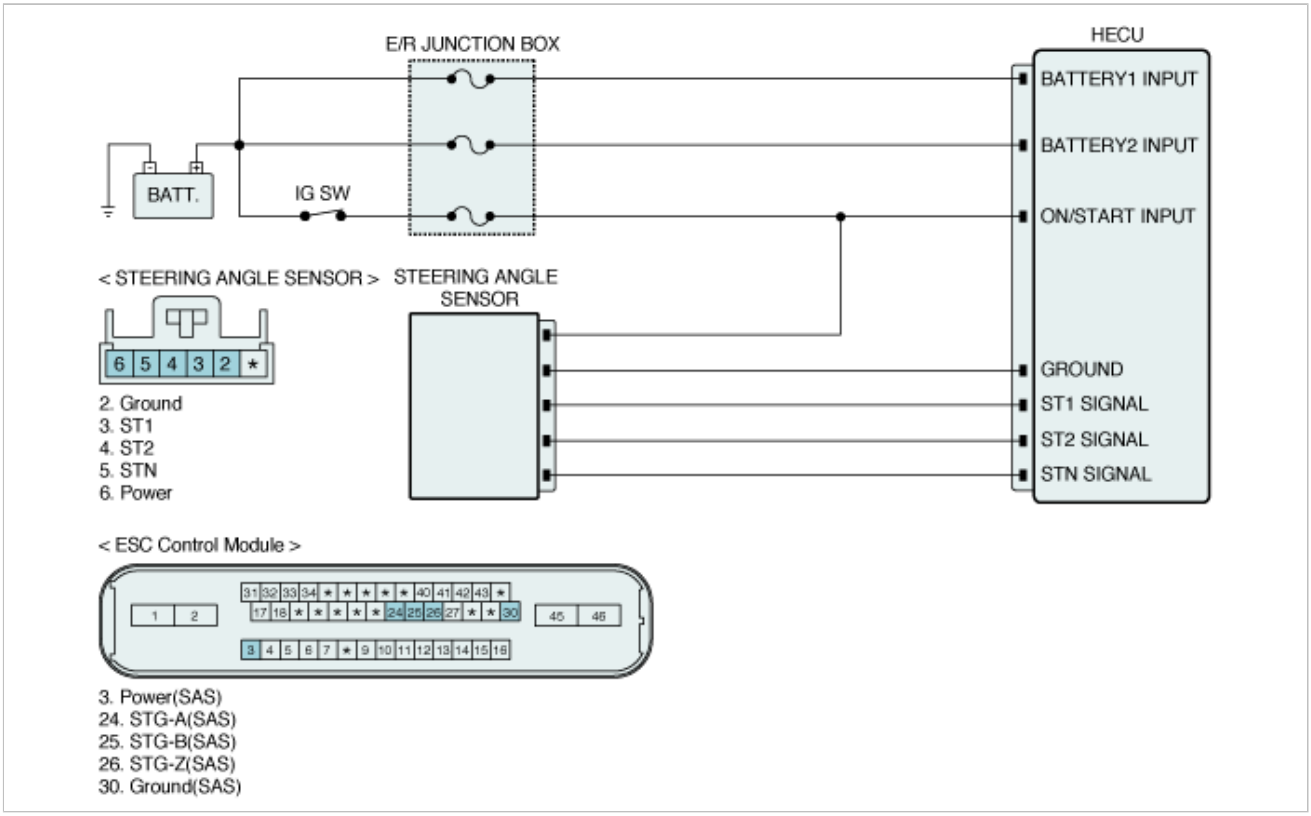

Signal Waveform & Data

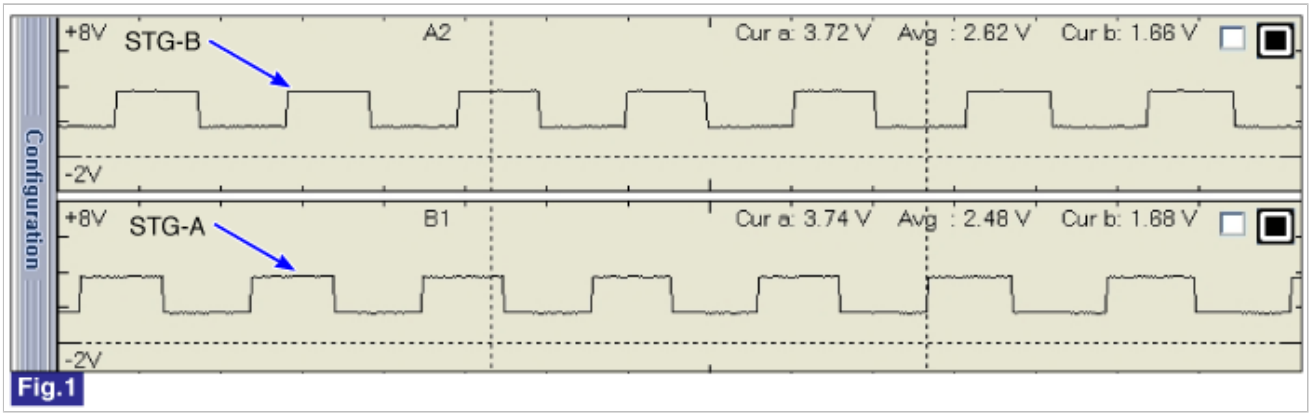

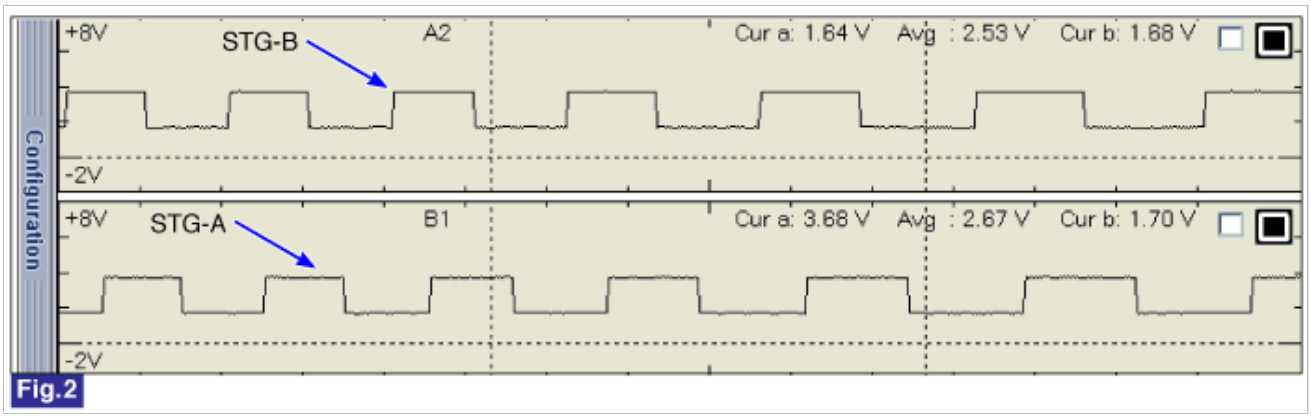

Fig 1) Normal waveform at turning the steering wheel into left
Fig 2) Normal waveform at turning the steering wheel into right

Monitor Scantool Data

1. Connect scantool to Data Link Connector(DLC).
2. Ignition "ON" & Engine "ON".
3. Turn the steering wheel to the left or right.
4. Monitor the "STEERING SNSR" parameters on the Scantool.

Specification :
If the parameters are changed according to wheel position during steering the wheel, it is normal condition.

Sensor Name	Value	Ref. Min	Ref. Max	Unit	Test Condition
☑ Steering Angle Sensor-1	HIGH			-	-
☑ Steering Angle Sensor-2	LOW			-	-
☑ Steering Angle Sensor-N	HIGH			-	-

Fig.1

Fig 1) Test Condition : Ignition "ON" & Engine "ON".
Normal Data

5. Whenever steering wheel is turned, is the steering sensor's scantool data changed?

YES	▸ Fault is intermittent caused by poor connection in steering sensor harness and/or HECU's connector or was repaired and HECU memory was not cleared. Thoroughly check connectors for looseness, poor connection, bending, corrosion, contamination, deterioration, or damage. Repair or replace as necessary and then go to "Verification of Vehicle Repair" procedure.
NO	▸ Go to "Terminal and Connector Inspection" procedure.

Terminal and Connector Inspection

1. Many malfunctions in the electrical system are caused by poor harness(es) and terminal condition. Faults can also be caused by interference from other electrical systems, and mechanical or chemical damage.
2. Thoroughly check connectors for looseness, poor connection, bending, corrosion, contamination, deterioration, or damage.
3. Has a problem been found?

YES	▸ Repair as necessary and then go to "Verification of Vehicle Repair" procedure.
NO	▸ Go to "Power Circuit Inspection" procedure.

Power Circuit Inspection

■ Open or Short Check

1. Ignition "ON" & Engine "OFF".
2. Measure voltage between power terminal of the steering angle sensor harness connector and chassis ground.

Specification : Approx. 12V

3. Is the measured value within specifications?

YES	▸ Go to "Ground Circuit Inspection" procedure.
NO	▸ Repair open or short in power circuit between steering angle sensor harness connector and HECU harness connector, and then go to "Verification of vehicle Repair" procedure. If there is no problem in Power circuit, Substitute with a known-good HECU and check for proper operation. If problem is corrected, replace HECU and then go to "Verification of Vehicle Repair" procedure.

Ground Circuit Inspection

■ Open or Short Check

1. Ignition "OFF" & Engine "OFF".
2. Disconnect steering angle sensor connector.
3. Measure resistance between ground terminal of the steering angle sensor harness connector and chassis ground.

Specification : Approx. below 1Ω

4. Is the measured value within specifications?

YES	▸ Go to "Signal Circuit Inspection" procedure.
NO	▸ Repair open or short in ground circuit between steering angle sensor harness connector and HECU harness connector and then, go to "Verification of vehicle Repair" procedure.

Signal Circuit Inspection

■ Open or Short Check

1. Ignition "ON" & Engine "OFF".
2. Measure resistance between signal terminals(STG-A/STG-B/STG-Z) of the HECU harness connector and signal terminals (STG-A/STG-B/STG-Z) of the steering angle sensor harness connector.

Specification : Approx. below 1Ω

3. Is the measured value within specifications?

	▸ Go to "Component Inspection" procedure.

YES	
NO	▸ Repair open in signal circuit between the steering angle sensor harness connector and HECU harness connector and then, go to "Verification of vehicle Repair" procedure.

Component Inspection

■ **Steering Angel Sensor Check**

1. Ignition "ON" & Engine "OFF".
2. Turn the steering wheel to the left or right.
3. Measure waveform between signal terminal of the steering angle sensor harness connector and chassis ground with osciloscope.

Specification :
Check if the voltage of signal waveform is normal.
- HIGH : 2.9±0.1V ~ 4.4±0.1V
- LOW : 1.2±0.1V ~ 2.1±0.1V

Check if there is a center signal at around center point(±20°).

4. Is the measured waveform normal?

YES	▸ Fault is intermittent caused by poor connection in steering sensor harness and/or HECU's connector. Go to "Verification of vehicle Repair" procedure.
NO	▸ If STN signal is HIGH on center position, Check for improper installation of steering angle sensor. Repair as necessary and then go to "Verification of vehicle Repair" procedure. If sensor mounting state is normal, Substitute with a known-good steering angle sensor and check for proper operation. If problem is corrected, replace steering angle sensor and then go to "Verification of Vehicle Repair" procedure.

Verification of Vehicle Repair

After a repair, it is essential to verify that the fault has been corrected.

1. Connect scantool and select "Diagnostic Trouble Codes(DTCs)" mode.
2. Using a scantool, Clear DTC.
3. Operate the vehicle within DTC Detecting Condition in General Information.
4. Using a scantool, Check DTC present.
5. Are any DTCs present ?

YES	▸ Go to the applicable troubleshooting procedure.
NO	▸ System performing to specification at this time.

General Description

The Steering wheel angle sensor uses two sensors (A-sensor and B-sensor) to determine the direction of the rotation.
The main components of each sensor are LED, photo transistor and slit plate.
The slit plate, which has 45 holes, is installed between LED and photo transistor, and generates signals if slit plate rotates according to the steering wheel rotation.
The sensor signals are generated by photo transistor which is driven whenever the light passes through the holes. The HECU detects operating speed and direction of the steering wheel by this input signal, and the signal is used to input signal for anti-roll control.

DTC Description

This monitoring function monitors the changing point of N-signal with measured steering angle from ST1 and ST2.
If N-signal changing point differs more than predefined degree, the failure is detected.
If there is no variation of the steering wheel angle for predefined time ECU detect the failure.

DTC Detecting Condition

Item	Detecting Condition	Possible cause
DTC Strategy	• Signal Monitoring	• Faulty steering angle sensor • Incorrect installation of the sensor
Enable Conditions	• The STN is low more than ±10 degrees for 70msec. • When the steering wheel is turned more than 370±5 degrees, if center is not detected, ECU detects the failure. • When the steering wheel angle is higher than 800 degrees, ECU detects the failure. • During straight driving, if the steering wheel angle is larger than 55±5 degree, ECU detects the failure. • When the curve is detected after driving straight, if there is no variation of the steering wheel angle for 3 sec, ECU detect the failure. • While the vehicle drive 60±5 degree ↔ -60±5 degree, if STN is not detected low, ECU detect the failure. • While the steering wheel is turning through center point, if steering angle sensor is against specification more than three times, ECU detect the failure.	
Fail Safe	• Inhibit the ESC control and allow the ABS/EBD control. • The ESC warning lamp is activated.	

Diagnostic Circuit Diagram

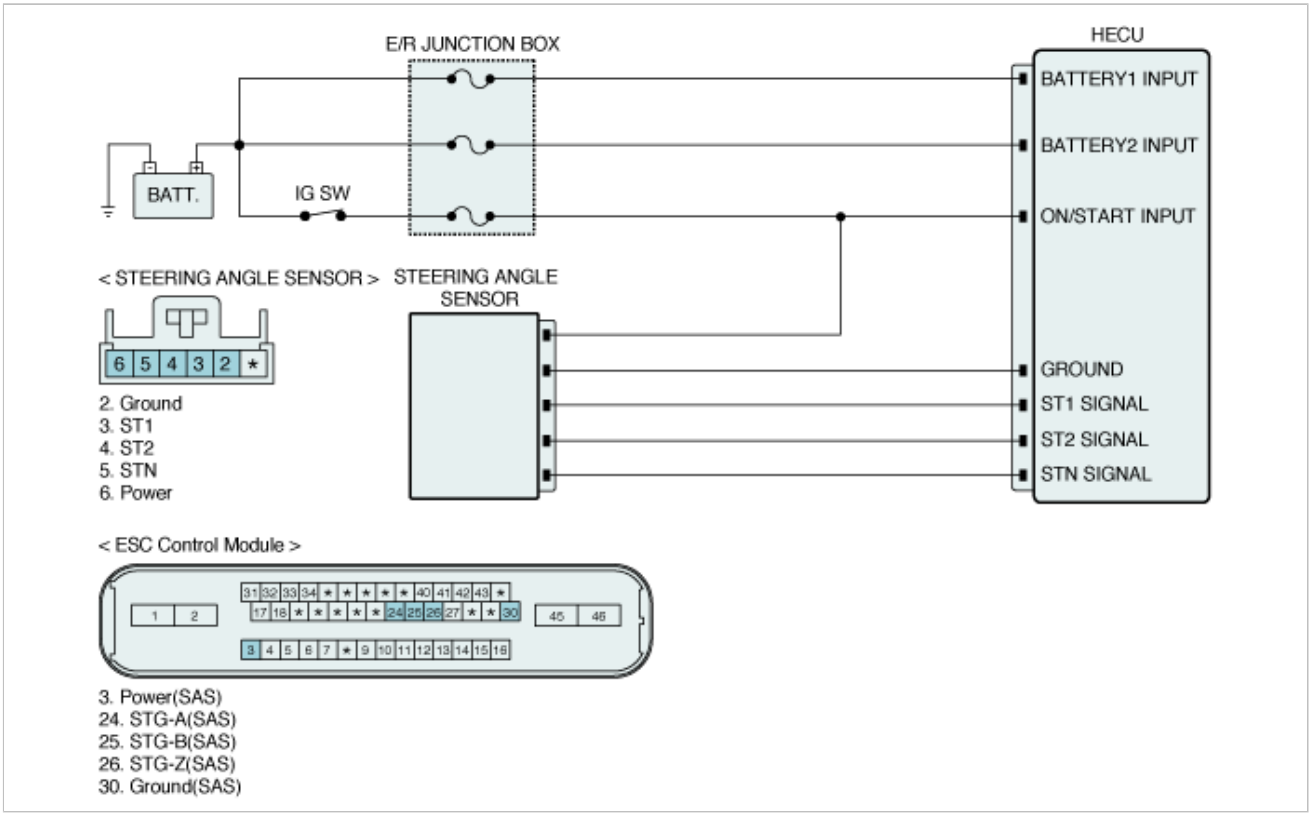

Signal Waveform & Data

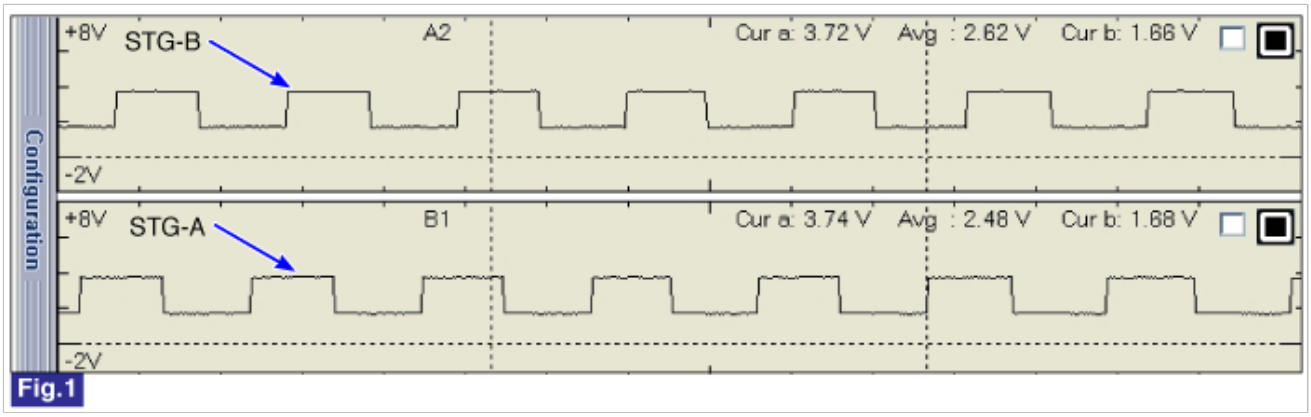

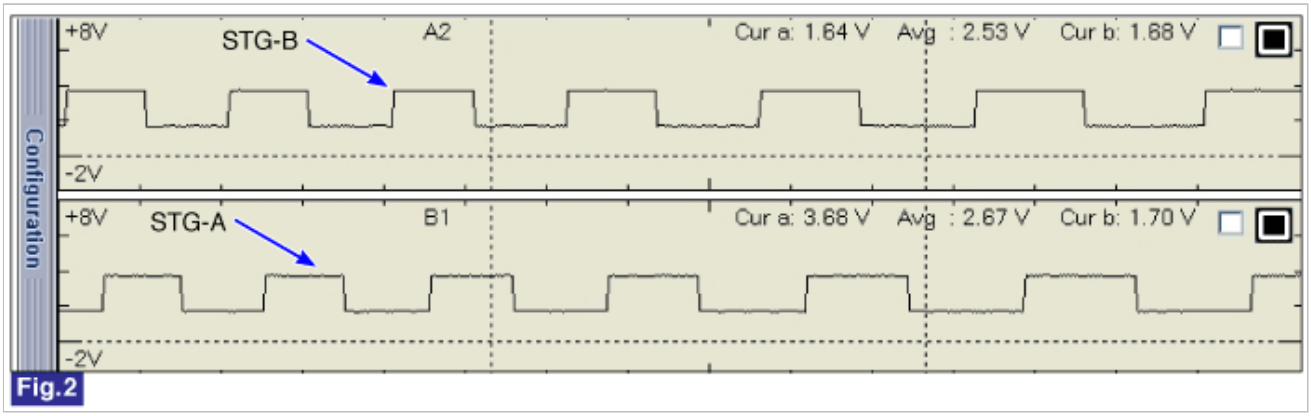

Fig 1) Normal waveform at turning the steering wheel into left
Fig 2) Normal waveform at turning the steering wheel into right

Monitor Scantool Data

1. Connect scantool to Data Link Connector(DLC).
2. Ignition "ON" & Engine "ON".

3. Turn the steering wheel to the left or right.
4. Monitor the "STEERING ANGLE SNSR" parameters on the Scantool.

Specification :
If the parameters are changed according to wheel position during steering the wheel, it is normal condition.

Sensor Name	Value	Ref. Min	Ref. Max	Unit	Test Condition
☑ Steering Angle Sensor-1	HIGH			-	-
☑ Steering Angle Sensor-2	LOW			-	-
☑ Steering Angle Sensor-N	HIGH			-	-

Fig.1

Fig 1) Test Condition : Ignition "ON" & Engine "ON".
Normal Data

5. Whenever steering wheel is turned, is the steering sensor's scantool data changed?

YES	▸ Fault is intermittent caused by poor connection in steering sensor harness and/or HECU's connector or was repaired and HECU memory was not cleared. Thoroughly check connectors for looseness, poor connection, bending, corrosion, contamination, deterioration, or damage. Repair or replace as necessary and then go to "Verification of Vehicle Repair" procedure.
NO	▸ Go to "Terminal and Connector Inspection" procedure.

Terminal and Connector Inspection

1. Many malfunctions in the electrical system are caused by poor harness(es) and terminal condition. Faults can also be caused by interference from other electrical systems, and mechanical or chemical damage.
2. Thoroughly check connectors for looseness, poor connection, bending, corrosion, contamination, deterioration, or damage.
3. Has a problem been found?

YES	▸ Repair as necessary and then go to "Verification of Vehicle Repair" procedure.
NO	▸ Go to "Component Inspection" procedure.

Component Inspection

■ Steering Angel Sensor Check

1. Ignition "ON" & Engine "ON".
2. Turn the steering wheel to the left or right.
3. Measure waveform between signal terminal of the steering angle sensor harness connector and chassis ground with osciloscope.

Specification :
Check if the voltage of signal waveform is normal.
- HIGH : 2.9±0.1V ~ 4.4±0.1V
- LOW : 1.2±0.1V ~ 2.1±0.1V

Check if there is a center signal at around center point(±20°).

4. Is the measured waveform normal?

YES	▸ Fault is intermittent caused by poor connection in steering sensor harness and/or HECU's connector. Go to "Verification of vehicle Repair" procedure.
NO	▸ If STN signal is HIGH on center position, Check for improper installation of steering angle sensor. Repair as necessary and then go to "Verification of vehicle Repair" procedure. If sensor mounting state is normal, Substitute with a known-good steering angle sensor and check for

	proper operation. If problem is corrected, replace steering angle sensor and then go to "Verification of Vehicle Repair" procedure.

Verification of Vehicle Repair

After a repair, it is essential to verify that the fault has been corrected.

1. Connect scantool and select "Diagnostic Trouble Codes(DTCs)" mode.
2. Using a scantool, Clear DTC.
3. Operate the vehicle within DTC Detecting Condition in General Information.
4. Using a scantool, Check DTC present.
5. Are any DTCs present ?

YES	▸ Go to the applicable troubleshooting procedure.
NO	▸ System performing to specification at this time.

General Description

When the vehicle is turning with respect to a vertical axis, the yaw rate sensor detects the yaw rate electroniclly by the vibration change of plate fork inside the yaw rate sensor.
If yaw velocity reaches the specific velocity after it detects the vehicle'ya wing, the ESC control is reactivated.
The lateral G sensor senses vehicle's lateral G. A small elemen t inside the sensor is attached to a deflectable leverarm by lateral G.
Direction and magnitude of lateral G loaded to vehicle can be known with electrostatic capacity changing according to lateral G.

DTC Description

A failure is detected if the yaw rate & lateral G sensor's message was not received or HECU detects CAN Bus off state for more than the specified failure detection time.

DTC Detecting Condition

Item		Detecting Condition	Possible cause
Case1	DTC Strategy	• Yaw rate & lateral G sensor message monitoring	• Faulty Yaw Rate & Lateral G sensor • Open or short of Yaw Rate & Lateral G sensor
	Enable Conditions	• In case that Yaw rate & lateral G sensor message was not received for more than 500ms within normal voltage condition. - The Monitoring starts 1s after Power Up.	
Case2	DTC Strategy	• Open, short monitoring	
	Enable Conditions	• In case sensor CAN BUS off state continued for more than 100ms.	
Fail Safe		• Inhibit the ESC control and allow the ABS/EBD control. • The ESC warning lamp is activated.	

Diagnostic Circuit Diagram

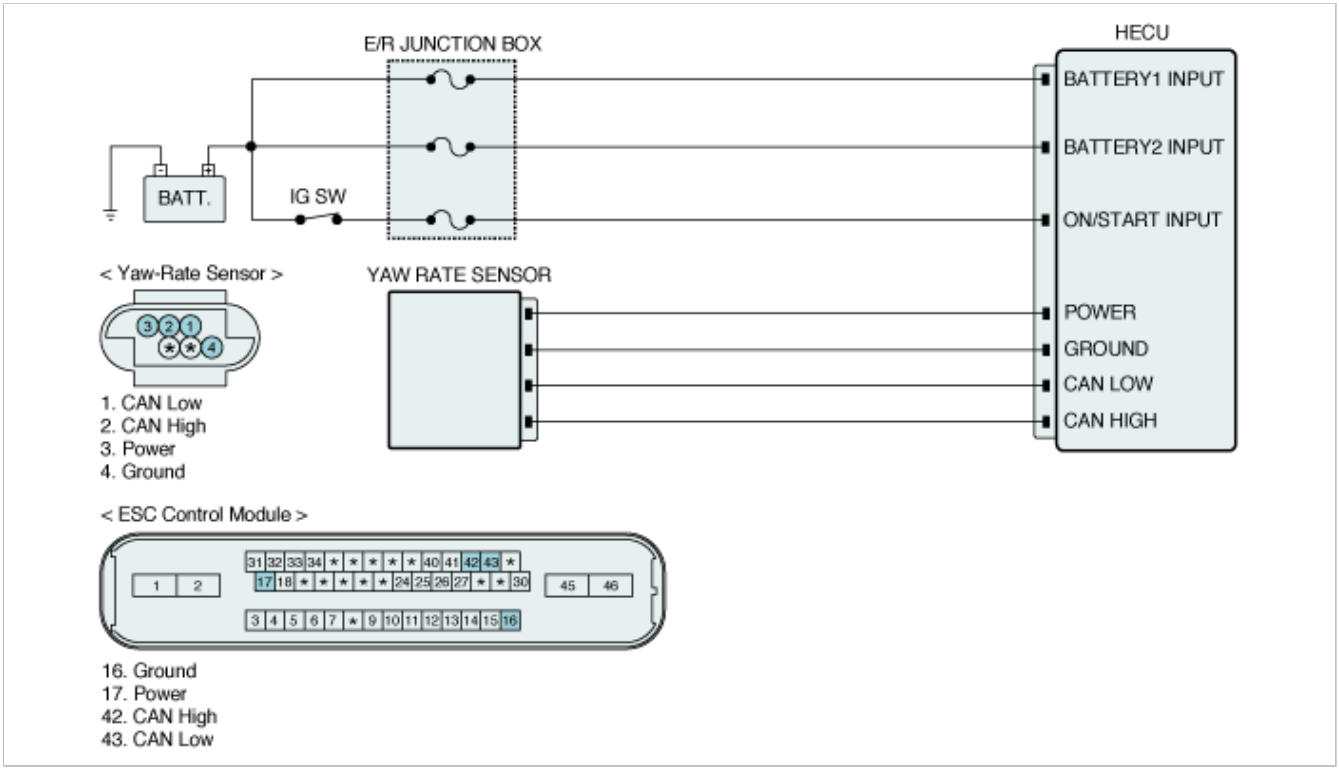

Terminal and Connector Inspection

1. Many malfunctions in the electrical system are caused by poor harness(es) and terminal condition. Faults can also be caused by interference from other electrical systems, and mechanical or chemical damage.
2. Thoroughly check connectors for looseness, poor connection, bending, corrosion, contamination, deterioration, or damage.
3. Has a problem been found?

YES	▸ Repair as necessary and then go to "Verification of Vehicle Repair" procedure.
NO	▸ Go to "Power Circuit Inspection" procedure.

Power Circuit Inspection

■ Open or Short Check

1. Ignition "ON" & Engine "OFF".
2. Measure voltage between power terminal of the Yaw Rate & Lateral G sensor harness connector and chassis ground.

Specification : Approx. 12V

3. Is the measured value within specifications?

YES	▸ Go to "Ground Circuit Inspection" procedure.
NO	▸ Repair open or short in power circuit between the yaw rate & lateral G sensor harness connector and HECU harness connector and then, go to "Verification of vehicle Repair"

Ground Circuit Inspection

■ Open or Short Check

1. Ignition "OFF" & Engine "OFF".
2. Disconnect yaw rate & lateral G sensor connector.
3. Measure resistance between ground terminal of the yaw rate & lateral G sensor harness connector and chassis ground.

Specification : Approx. below 1Ω

4. Is the measured value within specifications?

YES	▸ Go to "Signal Circuit Inspection" procedure.
NO	▸ Repair open or short in ground circuit between the yaw rate & lateral G sensor harness connector and HECU harness connector and then, go to "Verification of vehicle Repair"

Signal Circuit Inspection

■ Short Check (to ground)

1. Ignition "OFF" & Engine "OFF".
2. Disconnect yaw rate & lateral G sensor, HECU connector.
3. Measure resistance between CAN LOW terminal (CAN HIGH terminal) of the yaw rate & lateral G sensor harness connector and chassis ground.

Specification : ∞ Ω

4. Is the measured value within specifications?

YES	▸ Go to next procedure.
NO	▸ Repair short to ground in CAN signal circuit in case of abnormal resistance measured and then go to "Verification of vehicle Repair" procedure.

■ **Short Check (to battery)**

1. Ignition "ON" & Engine "OFF".
2. Disconnect HECU connector.
3. Measure voltage between CAN LOW terminal (CAN HIGH terminal) of the HECU harness connector and chassis ground.

Specification : Approx. 0 V

4. Is the measured value within specifications?

YES	▸ Go to "Component Inspection" procedure.
NO	▸ Repair short to battery in CAN signal circuit in case of abnormal voltage measured and then, go to "Verification of vehicle Repair" procedure.

Component Inspection

1. IG "OFF"
2. IG "ON"
3. After connecting scantool, check DTC on the scantool.
4. Using scantool, Erase the DTCs.
5. Using a scantool, Check DTC present.

6Is the same DTC shown?

YES	▸ Substitute with a known-good Yaw-rate & Lateral G sensor and check for proper operation. If problem is corrected, replace Yaw-rate & Lateral G sensor and then go to "Verification of Vehicle Repair" procedure.
NO	▸ This fault is intermittently caused by the sensor. Go to "Verification of Vehicle Repair" procedure.

Verification of Vehicle Repair

After a repair, it is essential to verify that the fault has been corrected.

1. Connect scantool and select "Diagnostic Trouble Codes(DTCs)" mode.
2. Using a scantool, Clear DTC.
3. Operate the vehicle within DTC Detecting Condition in General Information.
4. Using a scantool, Check DTC present.
5. Are any DTCs present ?

YES	▸ Go to the applicable troubleshooting procedure.
NO	▸ System performing to specification at this time.

General Description

When the vehicle is turning with respect to a vertical axis, the yaw rate sensor detects the yaw rate electroniclly by the vibration change of plate fork inside the yaw rate sensor.
If yaw velocity reaches the specific velocity after it detects the vehicle'ya wing, the ESC control is reactivated.
The lateral G sensor senses vehicle's lateral G. A small elemen t inside the sensor is attached to a deflectable leverarm by lateral G.
Direction and magnitude of lateral G loaded to vehicle can be known with electrostatic capacity changing according to lateral G.

DTC Description

If the difference between estimated value and measured value of the sensor is larger than predefined value for predefined time, the failure is recognized.

DTC Detecting Condition

Item		Detecting Condition	Possible cause
DTC Strategy		• Signal monitoring	• Faulty Yaw Rate & Lateral G sensor
Case1	Enable Conditions	• When the difference between estimated value and measured value of the yaw rate sensor is lager than Predefined value for specific time , ECU detects failure.	
Case2	Enable Conditions	• When the difference between estimated value and measured value of the lateral G sensor is lager than Predefined value for specific time , ECU detects failure.	
Case3	Enable Conditions	• Yaw signal is smaller than predefined value when CBIT is transmitted • Lateral G signal is smaller than defined value when CBIT is transmitted. ※ CBIT :Commanded Built In Test	
Case4	Enable Conditions	• In case that Yaw&LG Sensor Fail Flag is detected for defined time.	
Fail Safe		• Inhibit the ESC control and allow the ABS/EBD control. • The ESC warning lamp is activated.	

Diagnostic Circuit Diagram

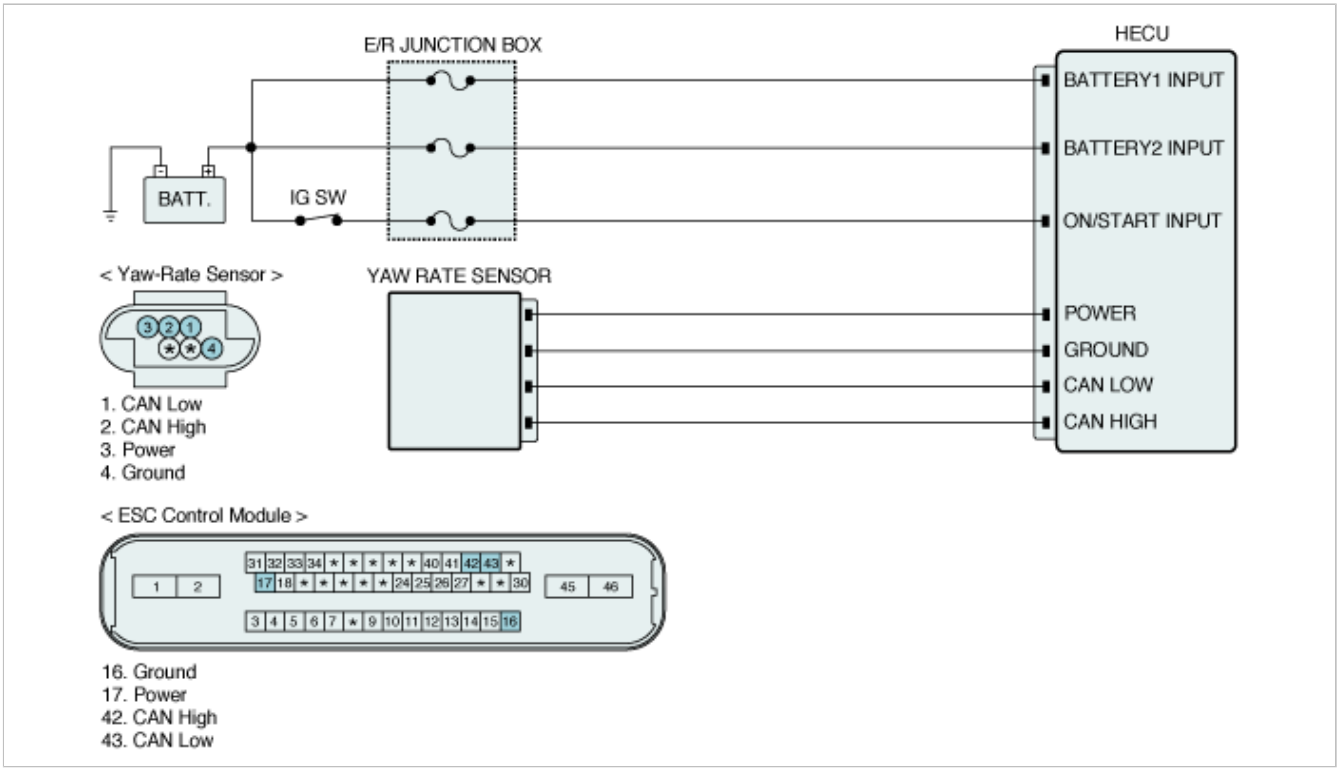

Terminal and Connector Inspection

1. Many malfunctions in the electrical system are caused by poor harness(es) and terminal condition. Faults can also be caused by interference from other electrical systems, and mechanical or chemical damage.
2. Thoroughly check connectors for looseness, poor connection, bending, corrosion, contamination, deterioration, or damage.
3. Has a problem been found?

YES	▸ Repair as necessary and then go to "Verification of Vehicle Repair" procedure.
NO	▸ Go to "Component Inspection" procedure.

Component Inspection

1. Ignition "OFF".
2. Ignition "ON" & Engine "OFF".
3. Drive the vehicle within DTC Detecting Condition in General Information, including the left turn one time and the right turn one time.
4. Using a scantool, Clear DTC.
5. Select "Diagnostic Trouble Codes(DTCs)" mode again.

6Are any DTCs present ?

YES	▸ 1) Substitute with a known-good Yaw Rate & Lateral G sensor and check for proper operation. If problem is corrected, replace Yaw Rate & Lateral G sensor and then go to "Verification of Vehicle Repair" procedure. 2) Substitute with a known-good HECU and check for proper operation. If problem is corrected, replace HECU and then go to "Verification of Vehicle Repair"procedure.
NO	▸ Fault is intermittent caused by faulty Yaw Rate & Lateral G sensor or poor connection in Yaw Rate & Lateral G sensor harness and/or HECU's connector. Go to "Verification of Vehicle Repair" procedure.

Verification of Vehicle Repair

After a repair, it is essential to verify that the fault has been corrected.

1. Connect scantool and select "Diagnostic Trouble Codes(DTCs)" mode.
2. Using a scantool, Clear DTC.
3. Operate the vehicle within DTC Detecting Condition in General Information. (Start and drive vehicle in gear and maintain vehicle speed at or above 40kmh. (24mph))
4. Using a scantool, Check DTC present.
5. Are any DTCs present ?

YES	▸ Go to the applicable troubleshooting procedure.
NO	▸ System performing to specification at this time.

GENESIS COUPE(BK) >2010 > G 2.0 DOHC > Brake System > ESC(Electronic Stability Control) System > C1503 TCS/ESC(ESP) Switch error

General Description

Driver can inhibit the ESC control by ESC switch.
When switch signal send into HECU, ESC warning lamp go ON and ESC control is stopped and if next switch signal is inputted again, ESC control is ready. This function is used for sporty driving or vehicle inspection.

DTC Description

Trouble code is set when the condition that the level of ESC switch is high is continued for 6sec.
When the ESC switch failure is set, Warning lamps wont illuminate and HECU allow the ABS/EBD/ESC control.

DTC Detecting Condition

Item	Detecting Condition	Possible cause
DTC Strategy	• Circuit Monitoring	• Open or short ESC switch circuit • Faulty ESC switch
Enable Conditions	• When the ESC switch is ON for 1 minute.	
Fail Safe	• Inhibit the ESCcontrol and allow the ABS/EBD control. • The ESC warning lamp is activated.	

Specification

Engine ON	ESP switch HIGH	ESP switch LOW
	7.0V ~16.0V	0V ~3.0V

Diagnostic Circuit Diagram

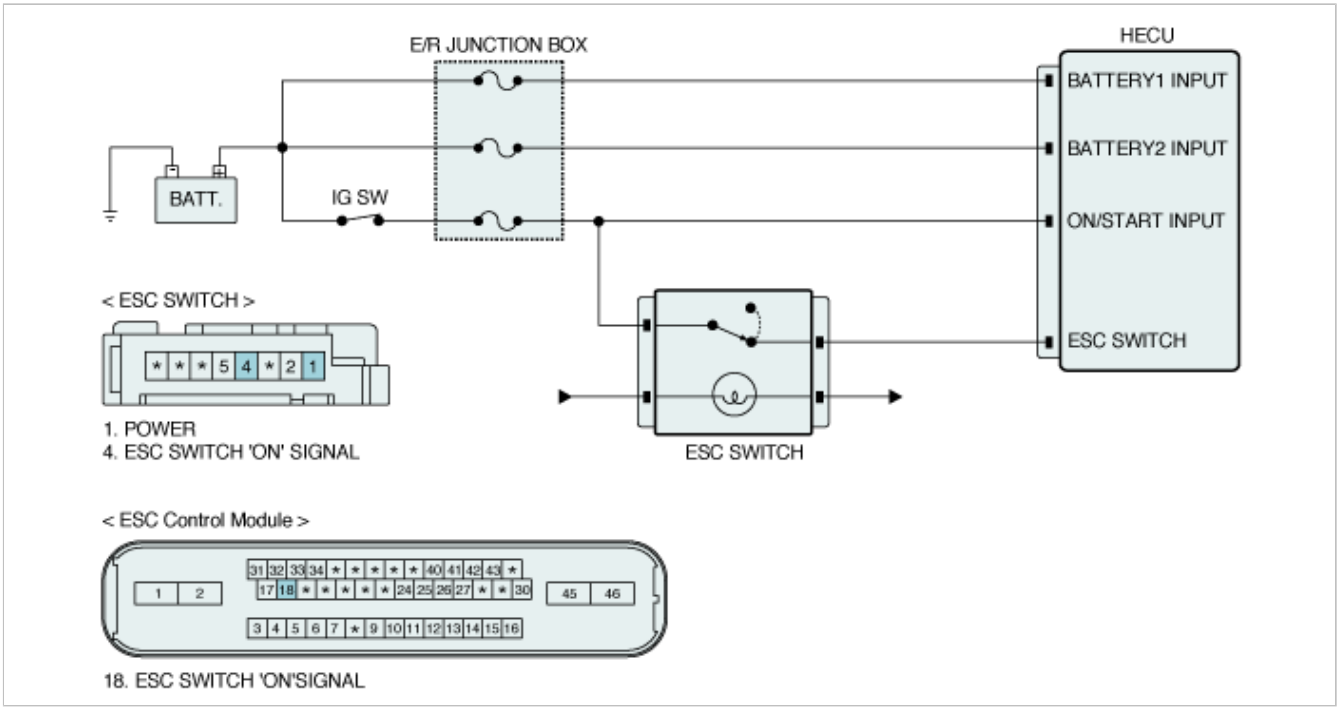

Terminal and Connector Inspection

1. Many malfunctions in the electrical system are caused by poor harness(es) and terminal condition. Faults can also be caused by interference from other electrical systems, and mechanical or chemical damage.
2. Thoroughly check connectors for looseness, poor connection, bending, corrosion, contamination, deterioration, or damage.
3. Has a problem been found?

YES	▸ Repair as necessary and then go to "Verification of Vehicle Repair" procedure.
NO	▸ Go to "Signal Circuit Inspection" procedure.

Signal Circuit Inspection

■ Open or Short Check

1. Ignition "ON" & Engine "OFF".
2. Press the ESC SWITCH.
3. Measure voltage between ESC switch signal terminal of the HECU harness connector and chassis ground.

Specification : Approx B+

4. Is the measured value within specifications?

YES	▸ Go to "Component Inspection" Procedure.
NO	▸ Check for open or blown fuse referring to "Circuit Diagram". Repair open or short in power circuit between battery and HECU harness connector and then, go to "Verification of vehicle Repair" procedure.

Component Inspection

■ ESC switch Check

1. Ignition "OFF" & Engine "OFF".
2. Disconnect the ESC switch connector.
3. Measure resistance between power terminal and siganl terminal of the ESC switch connector.

Specification :
Approx. below 1Ω (In case of pressing the ESC switch)
Approx. ∞ Ω (In case of not pressing the ESC switch)

4. Is the measured value within specifications?

YES	▸ Fault is intermittent caused by poor connection in ESC switch harness and/or HECU's connector. Go to "Verification of Vehicle Repair" procedure.
NO	▸ Substitute with a known-good ESC switch and check for proper operation. If problem is corrected, replace ESC switch and then go to "Verification of Vehicle Repair" procedure.

Verification of Vehicle Repair

After a repair, it is essential to verify that the fault has been corrected.

1. Connect scantool and select "Diagnostic Trouble Codes(DTCs)" mode.
2. Using a scantool, Clear DTC.
3. Operate the vehicle within DTC Detecting Condition in General Information.
4. Using a scantool, Check DTC present.
5. Are any DTCs present ?

YES	▸ Go to the applicable troubleshooting procedure.
NO	▸ System performing to specification at this time.

GENESIS COUPE(BK) >2010 > G 2.0 DOHC > Brake System > ESC(Electronic Stability Control) System > C1513 Brake switch error

General Description

This switch is mounted on the pedal assembly and is used to indicate brake pedal status to the HECU.
The switch is turned on when brake is pressed.
The brake light switch is a normally-open contact which runs to battery voltage when active (brake pressed).
When passive (brake released), the cable is grounded via the brake light bulbs.

DTC Description

The brake light signal is a reference to judge driver's intention for braking.
The HECU checks open or short circuit of brake light switch for normal ESC control.
If an error is present, the warning lamp will illuminate.

DTC Detecting Condition

Item	Detecting Condition	Possible cause
DTC Strategy	• Open circuit monitoring	• Open circuit in brake switch line • Faulty brake light switch • Faulty input stage in HECU
Enable Conditions	• If both BLS(brake lamp switch) and BS(brake switch) have a same state and MCP (Master Cylinder Pressure) >20bar for 500ms. • Outside an ABS/ESC control, and after normal operation of MCP, If the pressure sensor signal is higher than 20bar and BLS is low for 3sec. • If the BLS/BS changed more than 40times and MCP > 20bar for 5sec. • While Vehicle speed > 10km/h, TPS>5%, MCP < 7bar, if BLS is high over 1min.	
Fail Safe	• Inhibit the ESC control and allow the ABS/EBD control. • The ESC warning lamp is activated.	

Specification

Brake Light Switch	Voltage Range of "High"	Voltage Range of "Low"
	7.0V ~ 16.0V	0V ~ 3.0V

Diagnostic Circuit Diagram

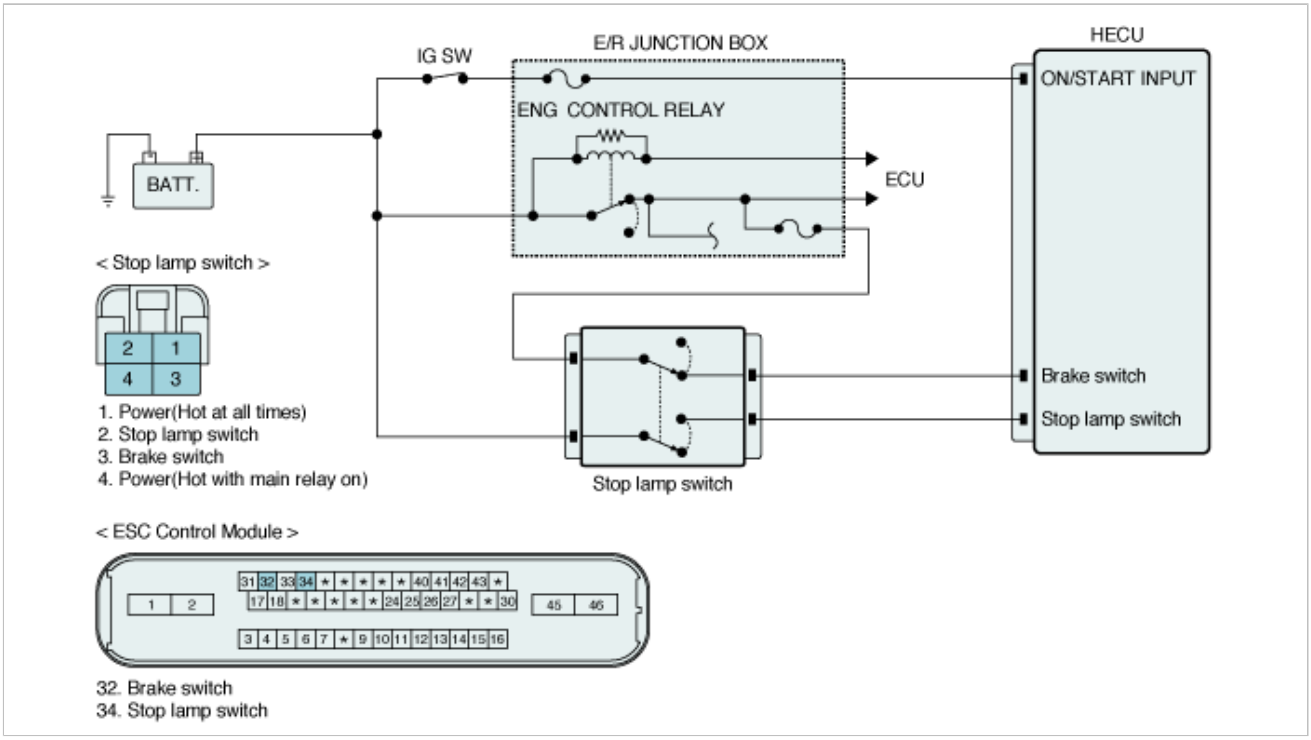

Monitor Scantool Data

1. Connect scantool to Data Link Connector(DLC)
2. Ignition "ON" & Engine "OFF".
3. Press the brake pedal.
4. Monitor the "BRAKE SWITCH" parameter on the scantool.

Specification : It is changed to ON/OFF.

Sensor Name	Value	Ref. Min	Ref. Max	Unit
☑ Brake Lamp Switch	OFF	ON	ON	-
☑ Brake Switch	ON	ON	ON	-

Fig.1

Sensor Name	Value	Ref. Min	Ref. Max	Unit
☑ Brake Lamp Switch	ON	ON	ON	-
☑ Brake Switch	OFF	ON	ON	-

Fig.2

Fig 1) Service data at not pressing the break pedal
Fig 2) Service data at pressing the break pedal

5. Whenever brake pedal is pushed down, is the brake switch's scantool data changed ON/OFF?

YES	▸ Fault is intermittent caused by poor connection in brake light switch harness and/or HECU's connector or was repaired and HECU memory was not cleared. Thoroughly check connectors for looseness, poor connection, bending, corrosion, contamination, deterioration, or damage. Repair or replace as necessary and then go to "Verification of Vehicle Repair" procedure.
NO	▸ Go to "Terminal and Connector Inspection" procedure.

Terminal and Connector Inspection

1. Many malfunctions in the electrical system are caused by poor harness(es) and terminal condition. Faults can also be caused by interference from other electrical systems, and mechanical or chemical damage.
2. Thoroughly check connectors for looseness, poor connection, bending, corrosion, contamination, deterioration, or damage.
3. Has a problem been found?

YES	▸ Repair as necessary and then go to "Verification of Vehicle Repair" procedure.
NO	▸ Go to "Signal Circuit Inspection (brake pedal isnt depressed)" procedure.

Signal circuit inspection

Signal circuit inspection (brake pedal isn't pressed)

■ Open or Short Check

1. Ignition "ON" & Engine "OFF".
2. Measure voltage between stop lamp switch (brake switch) terminal of the HECU harness connector and hassis ground.

Specification : Stop lamp switch - 0V
Brake switch B - B+

3. Is the measured waveform within specifications?

YES	▸ Go to "Signal Circuit Inspection (brake pedal is pressed)" procedure.
NO	▸ Check for open or blown fuse referring to "Circuit Diagram". Repair open or short in power circuit between battery and HECU harness connector and then, go to "Verification of vehicle Repair" procedure. If there is no problem in circuit, Go to "Component Inspection" procedure.

Signal Circuit Inspection (brake pedal is pressed)

■ Open or Short Check

1. Ignition "ON" & Engine "OFF".
2. Press the brake pedal.
3. Measure voltage between stop lamp switch (brake switch) terminal of the HECU harness connector and chassis ground.

Specification : Stop lamp switch - B+
Brake switch B - 0 V

4. Is the measured waveform within specifications?

YES	▸ Go to "Component Inspection" procedure.
NO	▸ Check for open or blown fuse referring to "Circuit Diagram". Repair open or short in signal circuit between battery and HECU harness connector and then go to "Verification of vehicle Repair" procedure. If there is no problem in circuit, Go to "Component Inspection" procedure.

Component Inspection

■ Brake light switch Check

1. Ignition "OFF" & Engine "OFF".
2. Disconnect the stop lamp switch connector.
3. Measure resistance between power terminal and siganl terminal of the stop lamp switch connector.

Specification :
Resistance between terminals of the stop lamp switch - ∞Ω (when the plunger is pushed down), 0Ω (when the plunger isnt pushed down).

Resistance between the terminals of the brake switch - ∞Ω (when the plunger is not pushed down), 0Ω (when the plunger is pushed down).

4. Is the measured value within specifications?

YES	▸ Fault is intermittent caused by poor connection in brake light switch harness and/or HECU's connector. Go to "Verification of Vehicle Repair" procedure.
NO	▸ Substitute with a known-good brake light switch and check for proper operation. If problem is corrected, replace brake light switch and then go to "Verification of Vehicle Repair" procedure.

Verification of Vehicle Repair

After a repair, it is essential to verify that the fault has been corrected.

1. Connect scantool and select "Diagnostic Trouble Codes(DTCs)" mode.
2. Using a scantool, Clear DTC.
3. Operate the vehicle within DTC Detecting Condition in General Information.
4. Using a scantool, Check DTC present.
5. Are any DTCs present ?

YES	▸ Go to the applicable troubleshooting procedure.
NO	▸ System performing to specification at this time.

General Description

The HECU consists of an ECU (Electronic Control Unit) and a HCU(Hydraulic Control Unit).
The HCU portion of the assembly contains a pump motor, solenoid valves, and accumulator.
Increase and decrease of hydraulic pressure is opreated by electronic motor, according to a measured signal by wheel speed sensor.
The function of HCU is to increase, decrease or maintain the hydralic pressure supplied to a wheel cylinder by operating return pump according to HECU control signal while ABS control is active.
The ECU monitors various sensor and switch inputs.
These inputs are used to make decisions regarding HCU component operation.

DTC Description

The HECU monitors the operation of the IC components such as memory, register, A/D converter and so on.
The ECU sets this code when the EEPROM data read by the master processor is different than prior data written, or when the master/slave processor detects abnormal operation in RAM, Status Register, Interrupt, Timer, A/D converter or cycle time.

DTC Detecting Condition

Item	Detecting Condition	Possible cause
DTC Strategy	• Internal Monitoring	• Faulty HECU
Enable Conditions	• When the MCU cant erase or write a data of the EEPROM. • When the master/slave processor detects abnormal operation in RAM, status register, interrupt, timer, A/D converter and cycle time.	
Fail Safe	• The ABS/EBD/ESC functions are inhibited. • The ABS/EBD/ESC warning lamps are activated.	

Diagnostic Circuit Diagram

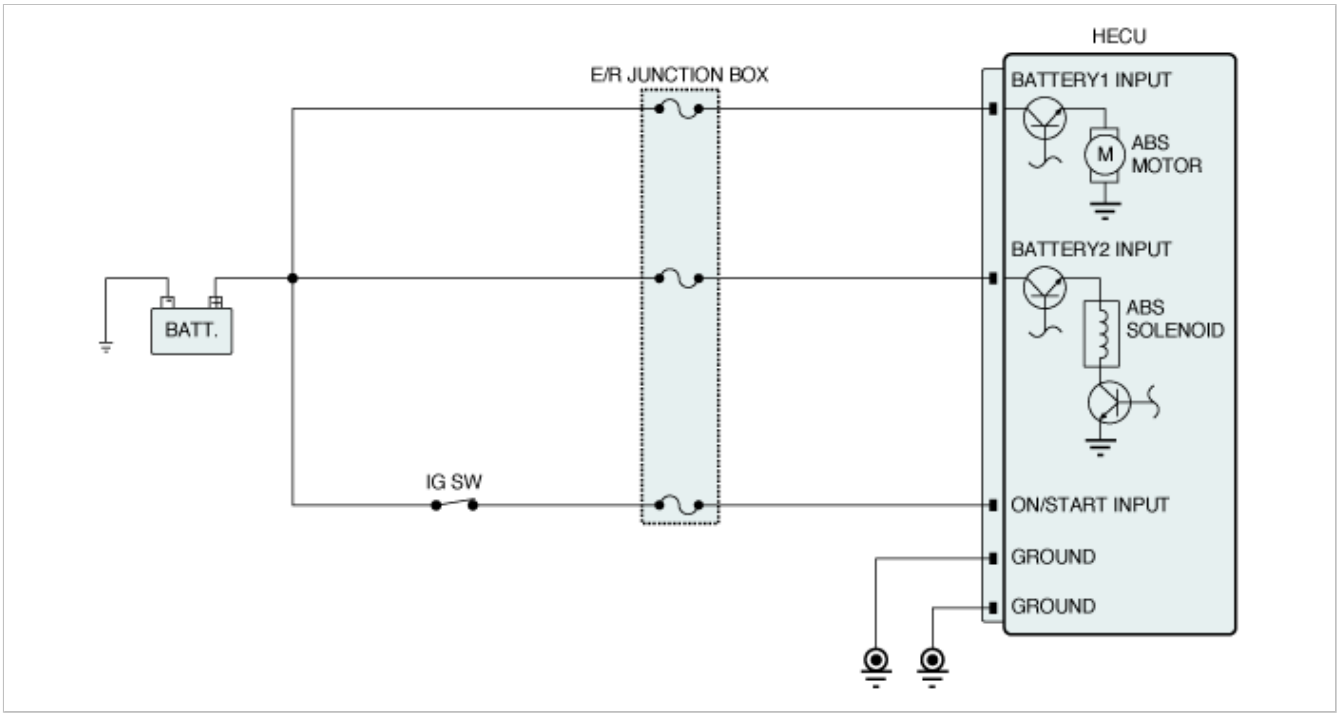

Terminal and Connector Inspection

1. Many malfunctions in the electrical system are caused by poor harness(es) and terminal condition. Faults can also be

caused by interference from other electrical systems, and mechanical or chemical damage.

2. Thoroughly check connectors for looseness, poor connection, bending, corrosion, contamination, deterioration, or damage.
3. Has a problem been found?

YES	▸ Repair as necessary and then go to "Verification of Vehicle Repair" procedure.
NO	▸ Go to "Component Inspection" Procedure.

Component Inspection

1. Ignition "OFF" & Engine "OFF".
2. Ignition "ON" & Engine "OFF".
3. Connect scantool and select "Diagnostic Trouble Codes(DTCs)" mode.
4. Using a scantool, Clear DTC.
5. Select "Diagnostic Trouble Codes(DTCs)" mode again.

6Are any DTCs present ?

YES	▸ Substitute with a known-good HECU and check for proper operation. If problem is corrected, replace HECU and then go to "Verification of Vehicle Repair" procedure.
NO	▸ Fault is intermittent caused by faulty HECU or was repaired and HECU memory was not cleared. Go to "Verification of Vehicle Repair" procedure.

Verification of Vehicle Repair

After a repair, it is essential to verify that the fault has been corrected.

1. Connect scantool and select "Diagnostic Trouble Codes(DTCs)" mode.
2. Using a scantool, Clear DTC.
3. Operate the vehicle within DTC Detecting Condition in General Information.
4. Using a scantool, Check DTC present.
5. Are any DTCs present ?

YES	▸ Go to the applicable troubleshooting procedure.
NO	▸ System performing to specification at this time.

General Description

The HECU send requirement data, such as Torque reduction, the number of fuel cut cylinders, and ESC control requests, to the Engine PCM(ECM & TCM) through CAN bus line.
The Engine PCM(ECM) performs fuel cut functions according to requests from the HECU and retards ignition timing by torque reduction requests.
The PCM(TCM) maintains current gear positions during ESC control time, in order not to increase power which causes a kickdown shift.

DTC Description

The HECU checks the CAN RAM for normal TCS control, and sets this code if a CAN RAM malfunction is detected.

DTC Detecting Condition

Item	Detecting Condition	Possible cause
DTC Strategy	• CAN RAM monitoring	• Faulty HECU
Enable Conditions	• CAN Hardware failure.	
Fail Safe	• Inhibit the ESC control and allow the ABS/EBD control. • The ESC warning lamp is activated. • The ABS warning lamp is activated.	

Diagnostic Circuit Diagram

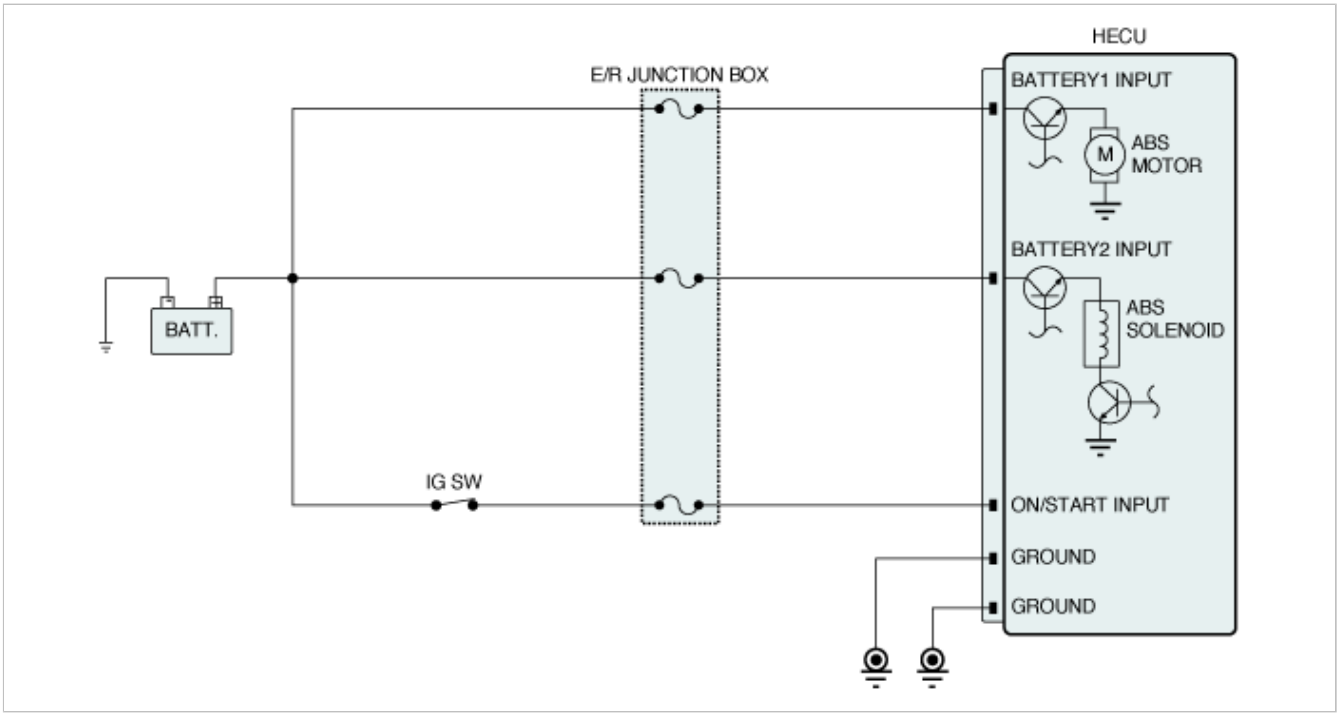

Terminal and Connector Inspection

1. Many malfunctions in the electrical system are caused by poor harness(es) and terminal condition. Faults can also be caused by interference from other electrical systems, and mechanical or chemical damage.
2. Thoroughly check connectors for looseness, poor connection, bending, corrosion, contamination, deterioration, or damage.
3. Has a problem been found?

YES	▶ Repair as necessary and then go to "Verification of Vehicle Repair" procedure.
	▶ Go to "Component Inspection" Procedure.

NO	

Component Inspection

1. Ignition "OFF" & Engine "OFF".
2. Ignition "ON" & Engine "OFF".
3. Connect scantool and select "Diagnostic Trouble Codes(DTCs)" mode.
4. Using a scantool, Clear DTC.
5. Select "Diagnostic Trouble Codes(DTCs)" mode again.

6Are any DTCs present ?

YES	▸ Substitute with a known-good HECU and check for proper operation. If problem is corrected, replace HECU and then go to "Verification of Vehicle Repair" procedure.
NO	▸ Fault is intermittent caused by faulty HECU or was repaired and HECU memory was not cleared. Go to "Verification of Vehicle Repair" procedure.

Verification of Vehicle Repair

After a repair, it is essential to verify that the fault has been corrected.

1. Connect scantool and select "Diagnostic Trouble Codes(DTCs)" mode.
2. Using a scantool, Clear DTC.
3. Operate the vehicle within DTC Detecting Condition in General Information.
4. Using a scantool, Check DTC present.
5. Are any DTCs present ?

YES	▸ Go to the applicable troubleshooting procedure.
NO	▸ System performing to specification at this time.

General Description

The HECU send requirement data, such as Torque reduction, the number of fuel cut cylinders, and ESC control requests, to the Engine PCM(ECM & TCM) through CAN bus line.
The Engine PCM(ECM) performs fuel cut functions according to requests from the HECU and retards ignition timing by torque reduction requests.
The PCM(TCM) maintains current gear positions during ESC control time, in order not to increase power which causes a kickdown shift.

DTC Description

The HECU checks the CAN communcation lines for normal ESC control, and sets this code if an ECM message is not received within 500ms.
The HECU does not detect this code until 2 seconds after the IG KEY is turned to ON.

DTC Detecting Condition

Item	Detecting Condition	Possible cause
DTC Strategy	• CAN message monitoring	• Faulty PCM(ECM) • Faulty HECU
Enable Conditions	• In case that EMS1 or EMS2 message was not received for more than 500ms within normal voltage condition. - The Monitoring starts 2000 ms after Power Up.	
Fail Safe	• Inhibit the ESC control and allow the ABS/EBD control. • The ESC warning lamp is activated. • The ABS warning lamp is activated.	

Diagnostic Circuit Diagram

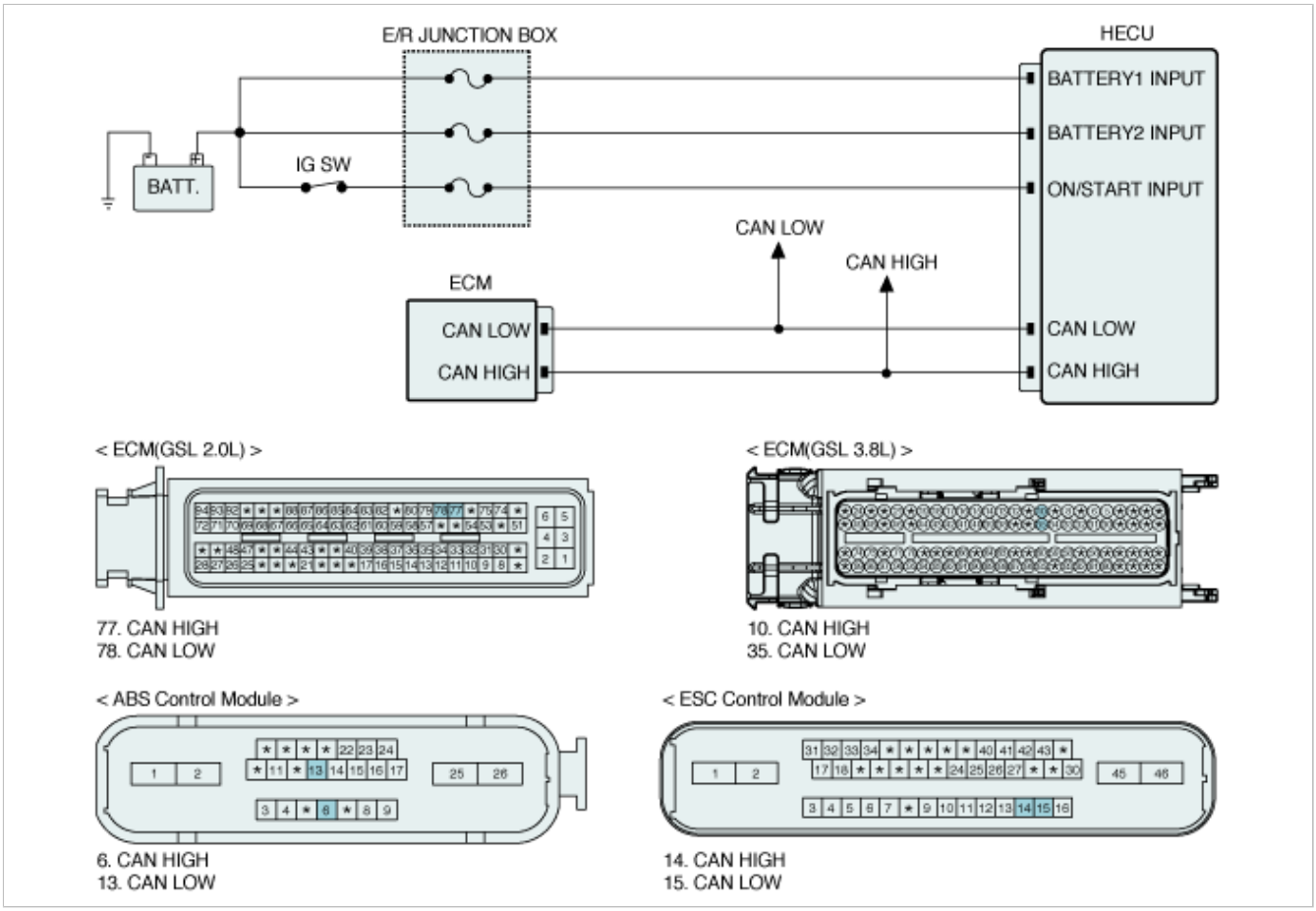

Terminal and Connector Inspection

1. Many malfunctions in the electrical system are caused by poor harness(es) and terminal condition. Faults can also be caused by interference from other electrical systems, and mechanical or chemical damage.
2. Thoroughly check connectors for looseness, poor connection, bending, corrosion, contamination, deterioration, or damage.
3. Has a problem been found?

YES	▸ Repair as necessary and then go to "Verification of Vehicle Repair" procedure.
NO	▸ Go to "Signal circuit inspection" procedure.

Signal circuit inspection

■ **Open Check**

1. Ignition "OFF" & Engine "OFF".
2. Disconnect HECU and ECM connector.
3. Measure resistance between CAN HIGH terminal(LOW terminal) of the HECU harness connector and CAN HIGH terminal(LOW terminal) of the ECM harness connector.

Specification : Approx. below 1Ω

4. Is the measured resistance within specifications?

YES	▸ Go to "Component inspection" procedure.
NO	▸ Repair open in CAN BUS line between HECU harness connector and ECM harness connector and then go to "Verification of Vehicle Repair" procedure.

Component Inspection

1. Ignition "OFF"
2. Ignition "ON" & Engine "OFF".
3. Connect scantool and select "Diagnostic Trouble Codes(DTCs)" mode.
4. Using a scantool, Clear DTC.
5. Select "Diagnostic Trouble Codes(DTCs)" mode again.

6Are any DTCs present ?

YES	▸ Substitute with a known-good PCM(ECM) and check for proper operation. If problem is corrected, replace PCM(ECM) and then go to "Verification of Vehicle Repair" procedure. If NG, replace HECU and then go to "Verification of Vehicle Repair" procedure.
NO	▸ Fault is intermittent caused by faulty HECU, faulty PCM(ECM) or was repaired and HECU memory was not cleared. Go to "Verification of Vehicle Repair" procedure.

Verification of Vehicle Repair

After a repair, it is essential to verify that the fault has been corrected.

1. Connect scantool and select "Diagnostic Trouble Codes(DTCs)" mode.
2. Using a scantool, Clear DTC.
3. Operate the vehicle within DTC Detecting Condition in General Information.
4. Using a scantool, Check DTC present.
5. Are any DTCs present ?

YES	▶ Go to the applicable troubleshooting procedure.
NO	▶ System performing to specification at this time.

GENESIS COUPE(BK) >2010 > G 2.0 DOHC > Brake System > ESC(Electronic Stability Control) System > C1612 CAN Time-out TCM

General Description

The HECU send requirement data, such as Torque reduction, the number of fuel cut cylinders, and ESC control requests, to the Engine PCM(ECM & TCM) through CAN bus line.
The Engine PCM(ECM) performs fuel cut functions according to requests from the HECU and retards ignition timing by torque reduction requests.
The PCM(TCM) maintains current gear positions during ESC control time, in order not to increase power which causes a kickdown shift.

DTC Description

The HECU checks the CAN communcation lines for normal ESC control, and sets this code if an TCM message is not received within 500ms.
The HECU does not detect this code until 2 seconds after the IG KEY is turned to ON.

DTC Detecting Condition

Item	Detecting Condition	Possible cause
DTC Strategy	• CAN message monitoring	• Faulty PCM(TCM) • Faulty HECU
Enable Conditions	• In case that TCM message was not received for more than 500ms within normal voltage condition. - The Monitoring starts 2000 ms after Power Up.	
Fail Safe	• Inhibit the ESC control and allow the ABS/EBD control. • The ESC warning lamp is activated. • The ABS warning lamp is activated.	

Diagnostic Circuit Diagram

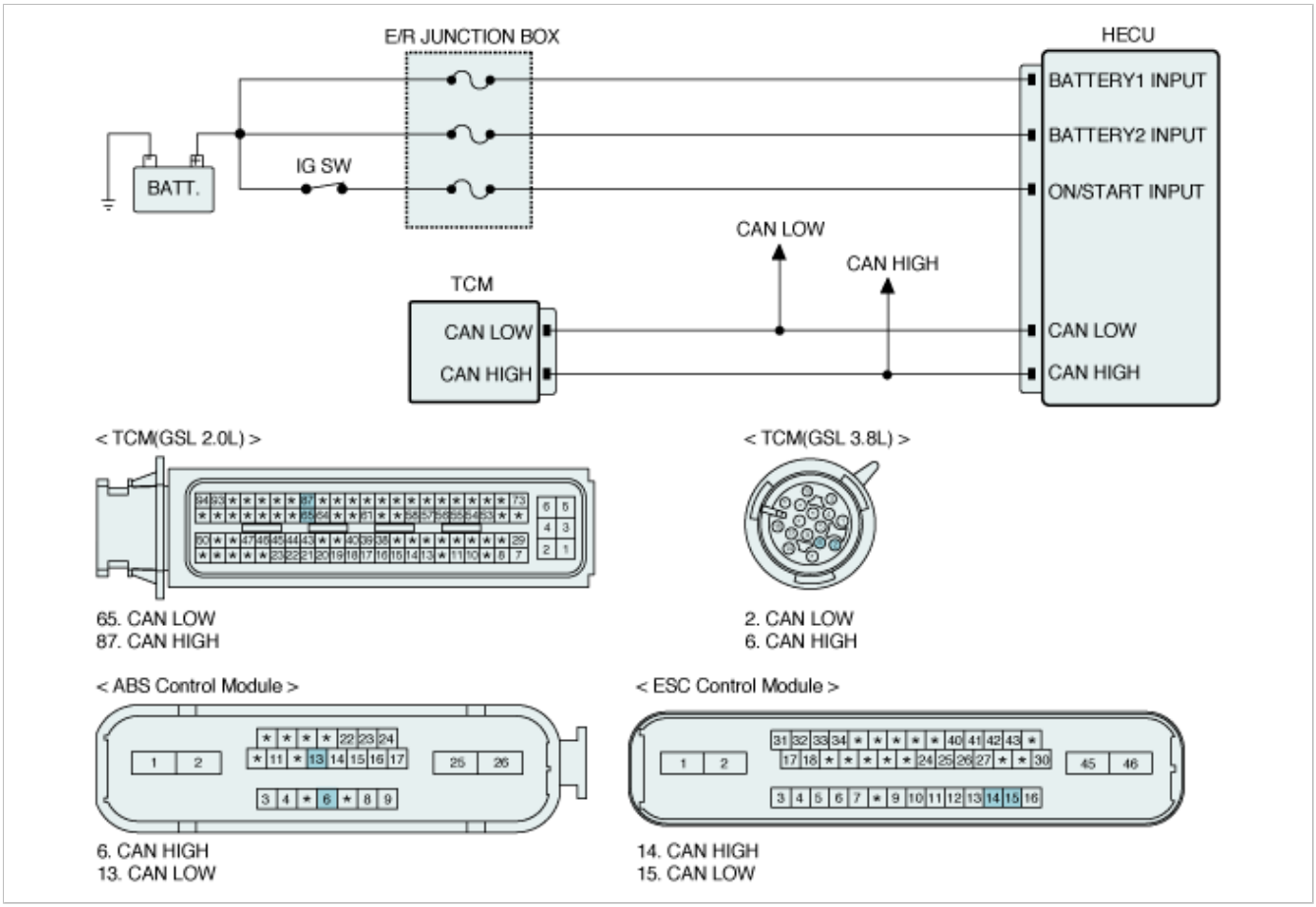

Terminal and Connector Inspection

1. Many malfunctions in the electrical system are caused by poor harness(es) and terminal condition. Faults can also be caused by interference from other electrical systems, and mechanical or chemical damage.
2. Thoroughly check connectors for looseness, poor connection, bending, corrosion, contamination, deterioration, or damage.
3. Has a problem been found?

YES	▸ Repair as necessary and then go to "Verification of Vehicle Repair" procedure.
NO	▸ Go to "Signal circuit inspection" procedure.

Signal circuit inspection

■ **Open Check**

1. Ignition "OFF" & Engine "OFF".
2. Disconnect HECU and ECM connector.
3. Measure resistance between CAN HIGH terminal(LOW terminal) of the HECU harness connector and CAN HIGH terminal(LOW terminal) terminal of the TCM harness connector.

Specification : Approx. below 1Ω

4. Is the measured resistance within specifications?

YES	▸ Go to "Component inspection" procedure.
NO	▸ Repair open in CAN BUS line between HECU harness connector and TCM harness connector and then go to "Verification of Vehicle Repair" procedure.

Component Inspection

1. Ignition "OFF"
2. Ignition "ON" & Engine "OFF".
3. Connect scantool and select "Diagnostic Trouble Codes(DTCs)" mode.
4. Using a scantool, Clear DTC.
5. Select "Diagnostic Trouble Codes(DTCs)" mode again.

6Are any DTCs present ?

YES	▸ Substitute with a known-good PCM(TCM) and check for proper operation. If problem is corrected, replace PCM(TCM) and then go to "Verification of Vehicle Repair" procedure. If NG, replace HECU and then go to "Verification of Vehicle Repair" procedure.
NO	▸ Fault is intermittent caused by faulty HECU, faulty PCM(TCM) or was repaired and HECU memory was not cleared. Go to "Verification of Vehicle Repair" procedure.

Verification of Vehicle Repair

After a repair, it is essential to verify that the fault has been corrected.

1. Connect scantool and select "Diagnostic Trouble Codes(DTCs)" mode.
2. Using a scantool, Clear DTC.
3. Operate the vehicle within DTC Detecting Condition in General Information.
4. Using a scantool, Check DTC present.
5. Are any DTCs present ?

YES	▶ Go to the applicable troubleshooting procedure.
NO	▶ System performing to specification at this time.

General Description

The HECU send requirement data, such as Torque reduction, the number of fuel cut cylinders, and ESC control requests, to the Engine PCM(ECM & TCM) through CAN bus line.
The Engine PCM(ECM) performs fuel cut functions according to requests from the HECU and retards ignition timing by torque reduction requests.
The PCM(TCM) maintains current gear positions during ESC control time, in order not to increase power which causes a kickdown shift.

DTC Description

The HECU checks the CAN communcation lines for normal ESC control, and sets this code if the data received between the EMS2 and TCM is not the same.
The HECU will not detect this code until 2 seconds after the IG KEY is turned ON.

DTC Detecting Condition

Item	Detecting Condition	Possible cause
DTC Strategy	• CAN message monitoring	• Faulty PCM(ECM) • Faulty HECU
Enable Conditions	• In case that the information about transmission is different in the EMS2 message and TCM message within normal voltage condition. - The Monitoring starts 2000 ms after Power Up.	
Fail Safe	• Inhibit the ESC control and allow the ABS/EBD control. • The ESC warning lamp is activated. • The ABS warning lamp is activated.	

Diagnostic Circuit Diagram

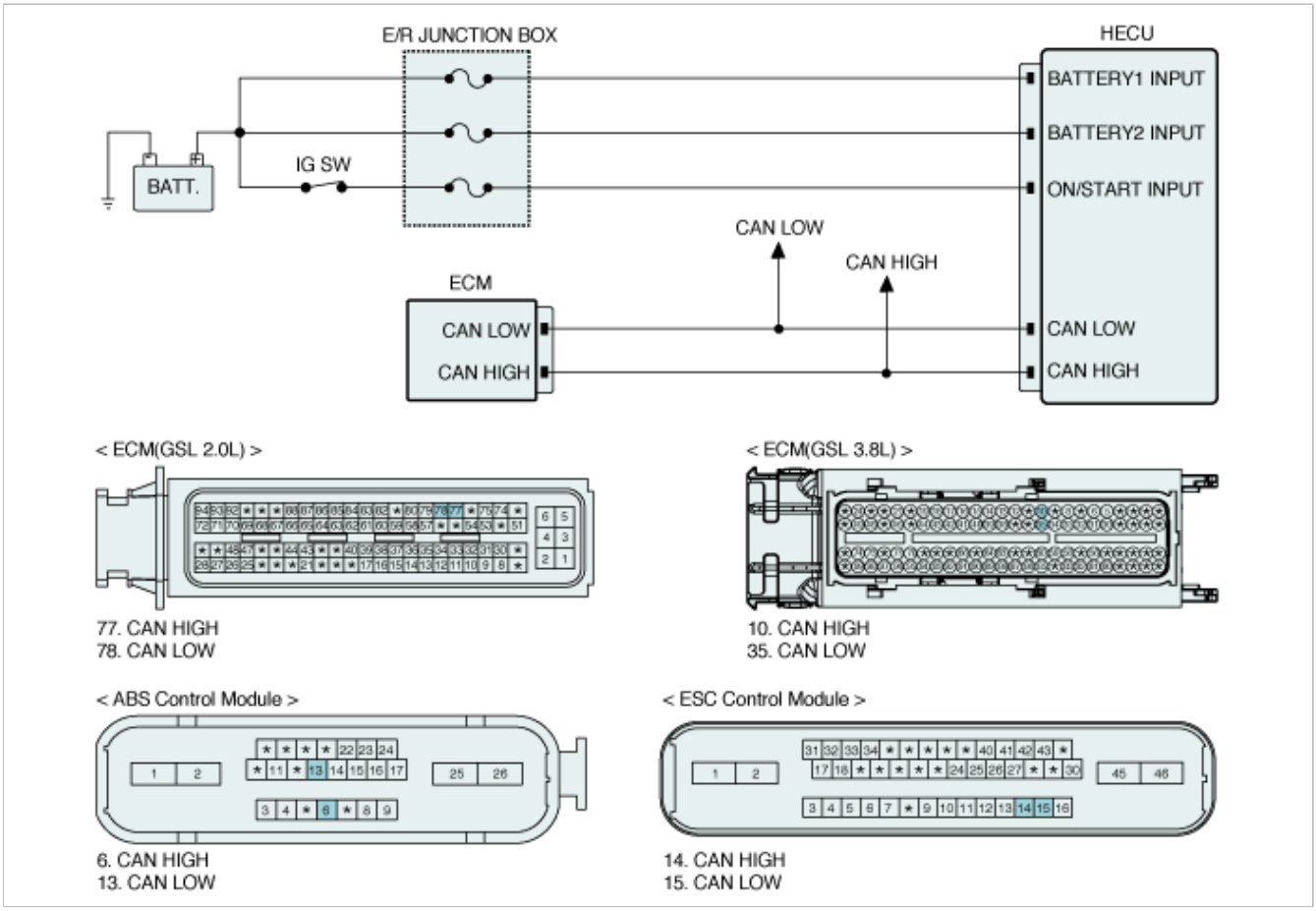

Component Inspection

1. Ignition "OFF"
2. Ignition "ON" & Engine "OFF".
3. Connect scantool and select "Diagnostic Trouble Codes(DTCs)" mode.
4. Using a scantool, Clear DTC.
5. Select "Diagnostic Trouble Codes(DTCs)" mode again.

6Are any DTCs present ?

YES	▸ Substitute with a known-good PCM(ECM) and check for proper operation. If problem is corrected, replace PCM(ECM) and then go to "Verification of Vehicle Repair" procedure. If NG, replace HECU and then go to "Verification of Vehicle Repair" procedure.
NO	▸ Fault is intermittent caused by faulty HECU, faulty PCM(ECM) or was repaired and HECU memory was not cleared. Go to "Verification of Vehicle Repair" procedure.

Verification of Vehicle Repair

After a repair, it is essential to verify that the fault has been corrected.

1. Connect scantool and select "Diagnostic Trouble Codes(DTCs)" mode.
2. Using a scantool, Clear DTC.
3. Operate the vehicle within DTC Detecting Condition in General Information.
4. Using a scantool, Check DTC present.
5. Are any DTCs present ?

YES	▸ Go to the applicable troubleshooting procedure.

NO	▶ System performing to specification at this time.

General Description

The HECU send requirement data, such as Torque reduction, the number of fuel cut cylinders, and ESC control requests, to the Engine PCM(ECM & TCM) through CAN bus line.
The Engine PCM(ECM) performs fuel cut functions according to requests from the HECU and retards ignition timing by torque reduction requests.
The PCM(TCM) maintains current gear positions during ESC control time, in order not to increase power which causes a kickdown shift.

DTC Description

The HECU checks the CAN communication lines for normal TCS control, and sets this code if CAN BUS OFF status is detected for more than 100ms.

DTC Detecting Condition

Item	Detecting Condition	Possible cause
DTC Strategy	• Open or short circuit monitoring	• Open or short circuit in CAN line • Faulty HECU
Enable Conditions	• In case CAN BUS off state continued for more than 100ms.	
Fail Safe	• Inhibit the ESCcontrol and allow the ABS/EBD control. • The ESC warning lamp is activated. • The ABS warning lamp is activated.	

Diagnostic Circuit Diagram

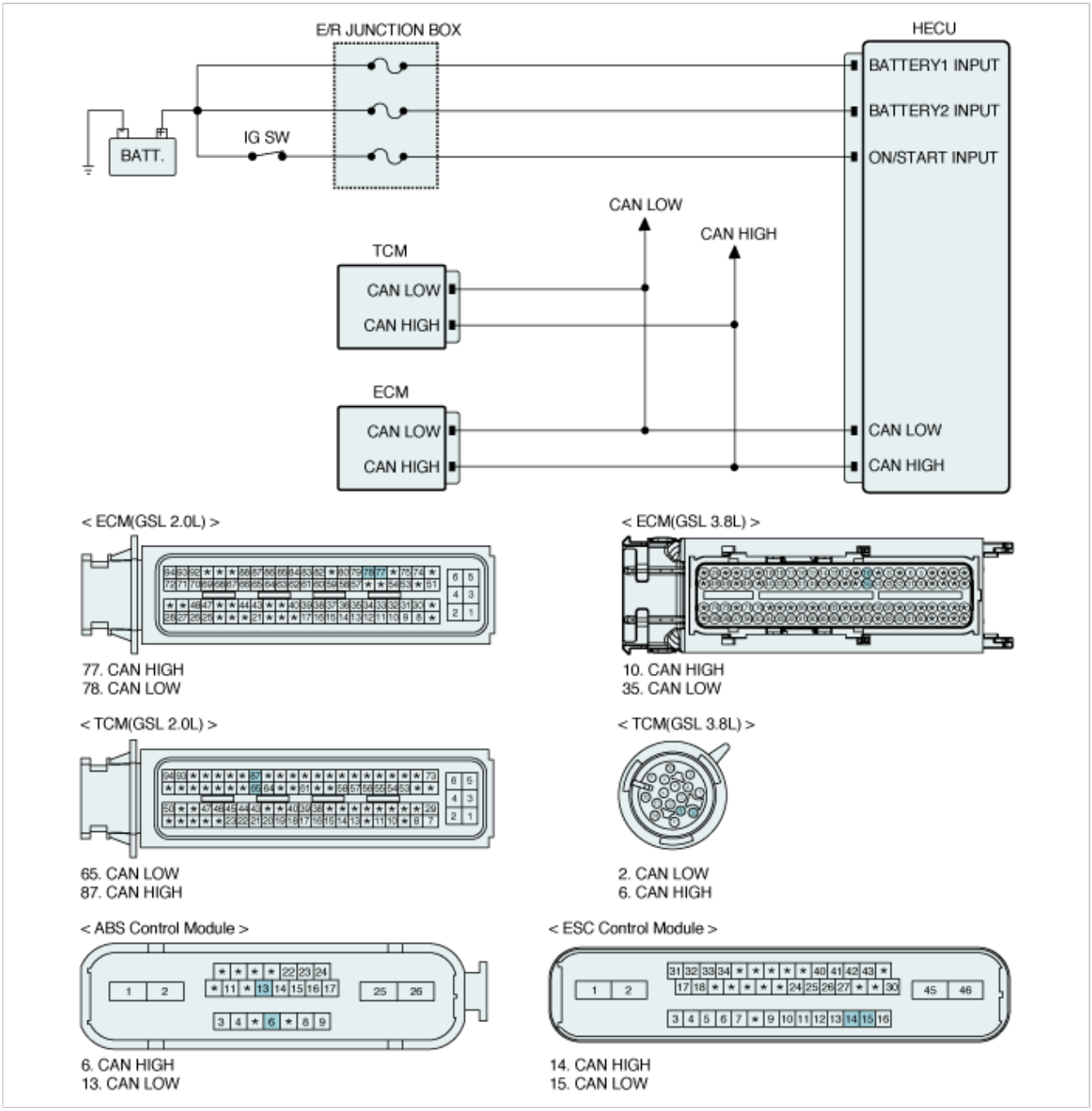

Terminal and Connector Inspection

1. Many malfunctions in the electrical system are caused by poor harness(es) and terminal condition. Faults can also be caused by interference from other electrical systems, and mechanical or chemical damage.
2. Thoroughly check connectors for looseness, poor connection, bending, corrosion, contamination, deterioration, or damage.
3. Has a problem been found?

YES	▶ Repair as necessary and then go to "Verification of Vehicle Repair" procedure.
NO	▶ Go to "CAN Signal Circuit Inspection" procedure.

CAN Signal Circuit Inspection

■ **Short Check (to ground)**

1. Ignition "OFF" & Engine "OFF".
2. Disconnect ECM/ TCM connector and the HECU connector.
3. Measure resistance between CAN-High terminal of ECM/TCM harness connector and CAN-High terminal of the HECU harness connector.
4. Measure resistance between CAN-Low terminal of ECM/TCM harness connector and CAN-Low terminal of the HECU harness connector.

Specification : Approx. below 1Ω

5. Is the measured value within specifications?

YES	▸ Go to "Check CAN communication line for short" procedure.
NO	▸ Repair open in the CAN communication line between ECM/TCM ECU and HECU, Go to "Verification of Vehicle Repair" procedure.

■ Check CAN communication line for short

1. Ignition "OFF" & Engine "OFF".
2. Disconnect ECM/TCM connector and HECU connector.
3. Measure resistance between CAN-High terminal of ECM/TCM harness connector and chassis ground.
4. Measure resistance between CAN-Low terminal of ECM/TCM harness connector and chassis ground.
5. Measure resistance between CAN-High terminal and CAN-Low of ECM/TCM harness connector.

Specification : Infinite (∞ Ω)

6Is the measured value within specifications?

YES	▸ Go to "Component Inspection" procedure.
NO	▸ Repair short in the CAN communication line between ECM/TCM/4WD ECU and HECU, Go to "Verification of Vehicle Repair" procedure.

Component Inspection

1. Ignition "OFF"
2. Ignition "ON" & Engine "OFF".
3. Connect scantool and select "Diagnostic Trouble Codes(DTCs)" mode.
4. Using a scantool, Clear DTC.
5. Select "Diagnostic Trouble Codes(DTCs)" mode again.

6Are any DTCs present ?

YES	▸ Substitute with a known-good HECU and check for proper operation. If problem is corrected, replace HECU and then go to "Verification of Vehicle Repair" procedure.
NO	▸ Fault is intermittent caused by poor connection in CAN signal harness and/or HECU's connector. Go to "Verification of Vehicle Repair" procedure.

Verification of Vehicle Repair

After a repair, it is essential to verify that the fault has been corrected.

1. Connect scantool and select "Diagnostic Trouble Codes(DTCs)" mode.
2. Using a scantool, Clear DTC.
3. Operate the vehicle within DTC Detecting Condition in General Information.

4. Using a scantool, Check DTC present.
5. Are any DTCs present ?

YES	▸ Go to the applicable troubleshooting procedure.
NO	▸ System performing to specification at this time.

General Description

When the vehicle is turning with respect to a vertical axis, the yaw rate sensor detects the yaw rate electroniclly by the vibration change of plate fork inside the yaw rate sensor.
If yaw velocity reaches the specific velocity after it detects the vehicle'ya wing, the ESC control is reactivated.
The lateral G sensor senses vehicle's lateral G. A small elemen t inside the sensor is attached to a deflectable leverarm by lateral G.
Direction and magnitude of lateral G loaded to vehicle can be known with electrostatic capacity changing according to lateral G.

DTC Description

The HECU checks the sensor CAN H/W for normal ESC control, and sets this code if a sensor CAN H/W malfunction is detected.

DTC Detecting Condition

Item	Detecting Condition	Possible cause
DTC Strategy	• Internal Monitoring	• Faulty HECU • Faulty Yaw Rate & Lateral G sensor
Enable Conditions	• Sensor CAN H/W failure.	
Fail Safe	• Inhibit the ESC control and allow the ABS/EBD control. • The ESC warning lamp is activated.	

Diagnostic Circuit Diagram

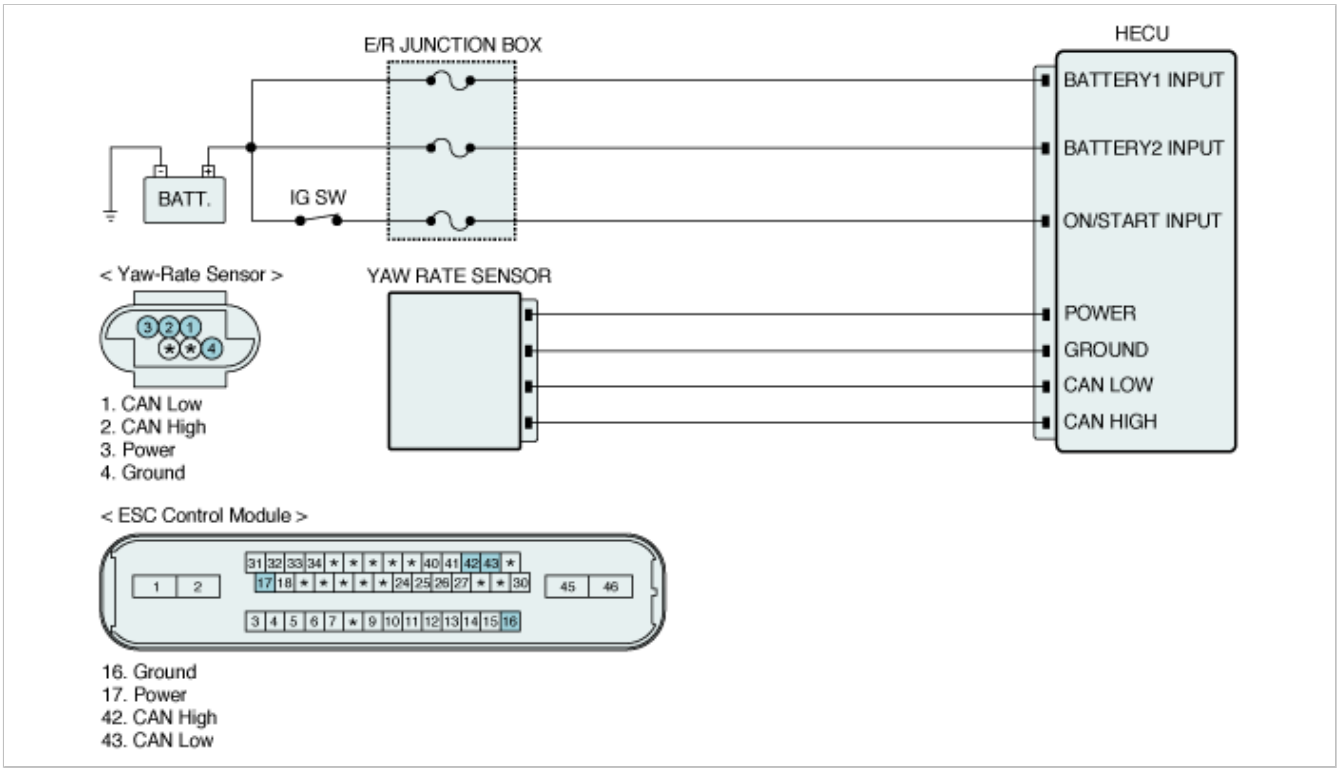

Terminal and Connector Inspection

1. Many malfunctions in the electrical system are caused by poor harness(es) and terminal condition. Faults can also be caused by interference from other electrical systems, and mechanical or chemical damage.
2. Thoroughly check connectors for looseness, poor connection, bending, corrosion, contamination, deterioration, or damage.
3. Has a problem been found?

YES	▶ Repair as necessary and then go to "Verification of Vehicle Repair" procedure.
NO	▶ Go to "Component Inspection" Procedure.

Component Inspection

1. Ignition "OFF" & Engine "OFF".
2. Ignition "ON" & Engine "OFF".
3. Connect scantool and select "Diagnostic Trouble Codes(DTCs)" mode.
4. Using a scantool, Clear DTC.
5. Select "Diagnostic Trouble Codes(DTCs)" mode again.

6Are any DTCs present ?

YES	▶ Substitute with a known-good HECU and check for proper operation. If problem is corrected, replace HECU and then go to "Verification of Vehicle Repair" procedure.
NO	▶ Fault is intermittent caused by faulty HECU or was repaired and HECU memory was not cleared. Go to "Verification of Vehicle Repair" procedure.

Verification of Vehicle Repair

After a repair, it is essential to verify that the fault has been corrected.

1. Connect scantool and select "Diagnostic Trouble Codes(DTCs)" mode.
2. Using a scantool, Clear DTC.
3. Operate the vehicle within DTC Detecting Condition in General Information.
4. Using a scantool, Check DTC present.
5. Are any DTCs present ?

YES	▶ Go to the applicable troubleshooting procedure.
NO	▶ System performing to specification at this time.

GENESIS COUPE(BK) >2010 > G 2.0 DOHC > Brake System > ESC(Electronic Stability Control) System > C2112 Valve Relay Error

General Description

The HECU supplies battery power to all soleonid valves with a valve relay which is controlled by the Electronic Control UNIT(ECU).
The valve relay and all solenoid valves are installed inside the HECU (Hydraulic and Electronic Control Unit).

DTC Description

ABS ECU monitors voltage of the valve relay to check if ABS ECU can perform ABS control normally.
When the valve relay is switched to ON, the HECU will set this code if the solenoid drive voltage is below permissible voltage ranges for a period of time.
When the valve relay is switched to OFF, the HECU sets this code if the solenoid drive voltage is over the permissible voltage range for a period of time.

DTC Detecting Condition

Item		Detecting Condition	Possible cause
DTC Strategy		• Voltage Monitoring	• Open or short of power supply circuit • Blown fuse • Faulty HECU
Case1 (Open)	Enable Conditions	• If the valve relay is switched on and the reference voltage of valve relay < 5±0.5V continuously for 56ms, the failure is detected.	
Case2 (Short or leakage)	Enable Conditions	• If the valve relay is switched off and voltage of valve relay > 6±0.5V or < 2.5±0.5V continuously for 56ms, the failure is detected.	
Fail Safe		• The ABS/EBD/ESC functions are inhibited. • The ABS/EBD/ESC warning lamps are activated.	

Diagnostic Circuit Diagram

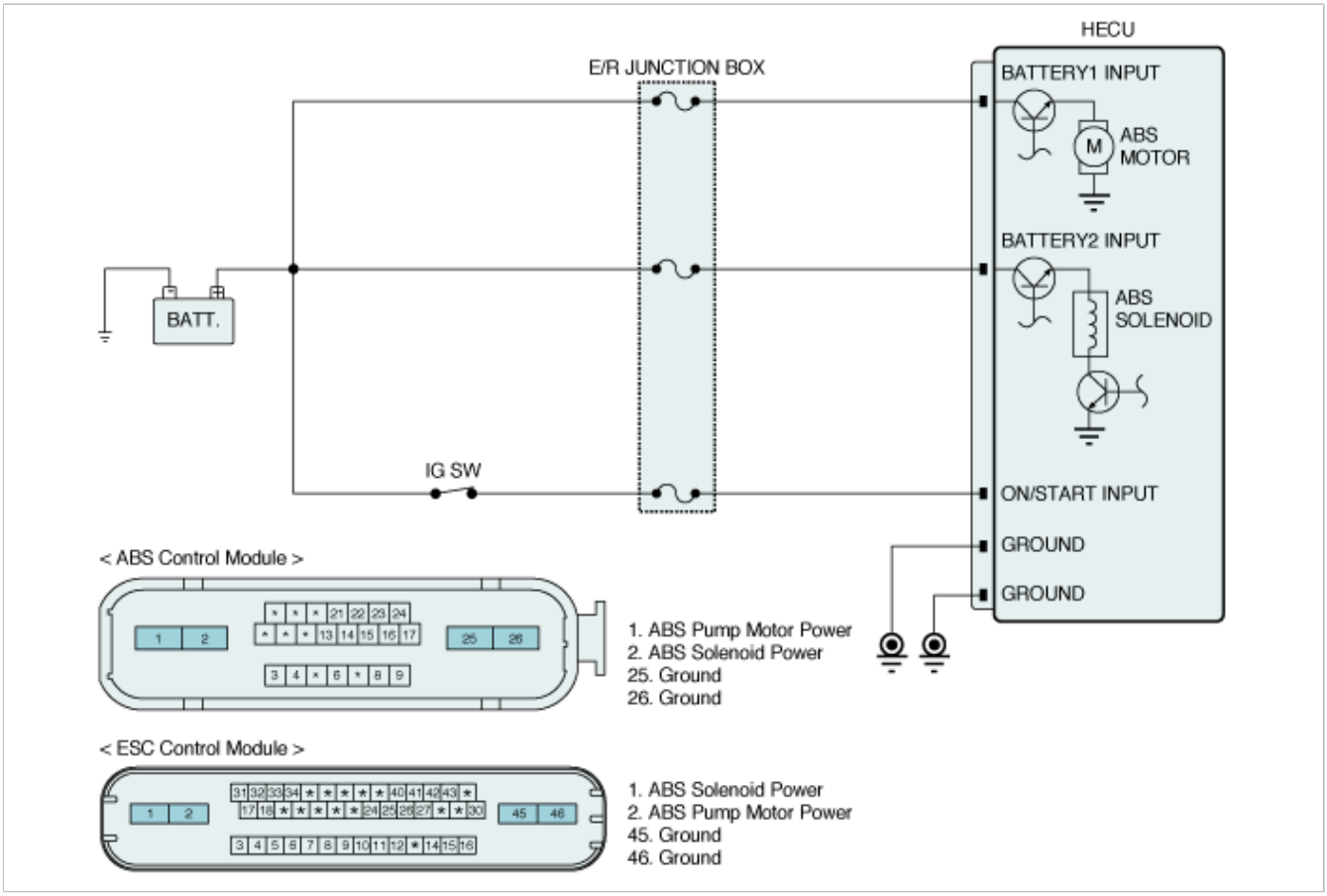

Terminal and Connector Inspection

1. Many malfunctions in the electrical system are caused by poor harness(es) and terminal condition. Faults can also be caused by interference from other electrical systems, and mechanical or chemical damage.
2. Thoroughly check connectors for looseness, poor connection, bending, corrosion, contamination, deterioration, or damage.
3. Has a problem been found?

YES	▸ Repair as necessary and then go to "Verification of Vehicle Repair" procedure.
NO	▸ Go to "Power Circuit Inspection" procedure.

Power Circuit Inspection

■ Open or Short Check

1. Ignition "ON" & Engine "OFF".
2. Measure voltage between power terminal of the HECU harness connector and chassis ground.

Specification : B+

3. Is the measured value within specifications?

YES	▸ Go to "Ground Circuit Inspection" procedure.
NO	▸ Check for open or blown fuse referring to "Circuit Diagram". Repair open or short in power circuit between battery and HECU harness connector and then, go to "Verification of vehicle Repair" procedure.

Ground Circuit Inspection

■ Open or Short Check

1. Ignition "OFF" & Engine "OFF".
2. Disconnect the HECU connector.
3. Measure resistance between ground terminal of the HECU harness connector and chassis ground.

Specification : Approx. below 1Ω

4. Is the measured value within specifications?

YES	▸ Substitute with a known-good HECU and check for proper operation. If problem is corrected, replace HECU and then go to "Verification of Vehicle Repair" procedure.
NO	▸ Repair open or short in ground circuit between HECU harness connector and chassis ground, and then go to "Verification of vehicle Repair" procedure.

Verification of Vehicle Repair

After a repair, it is essential to verify that the fault has been corrected.

1. Connect scantool and select "Diagnostic Trouble Codes(DTCs)" mode.
2. Using a scantool, Clear DTC.
3. Operate the vehicle within DTC Detecting Condition in General Information.
4. Using a scantool, Check DTC present.
5. Are any DTCs present ?

YES	▸ Go to the applicable troubleshooting procedure.

NO	▶ System performing to specification at this time.

General Description

The Vacuum Pump System is set up in a vehicle in order to make the vacuum enough when a drvier presses the brake pedal on the high ground. To operate this system, the vacuum pump is installed on a vehicle.
If the vacuum is not sufficient to press the brake pedal, the HECU senses it through the vacuum switch, which is installed on booster. And then the HECU supplies the power to the vacuum pump by grounding the circuit of the vacuum pump relay. When the vacuum pump is supplied with electric power, it makes the vacuum and supplements it to the booster.

DTC Description

The HECU monitors the vacuum pump relay for a normal operation and if there is a open or short circuit in the relay, this DTC is set.

DTC Detecting Condition

Item	Detecting Condition	Possible cause
DTC Strategy	• Voltage Monitoring	• Open or short in the vacuum pump relay circuit • Faulty vacuum pump relay
Enable Conditions	• When the vacuum pump relay is switched off, the vacuum pump relay drive monitor has a low value for more than a certain period • When the vacuum pump realy is switched on, the vacuum pump relay drive monitor has a high value for more than a certain period	
Fail Safe	• -	

Diagnostic Circuit Diagram

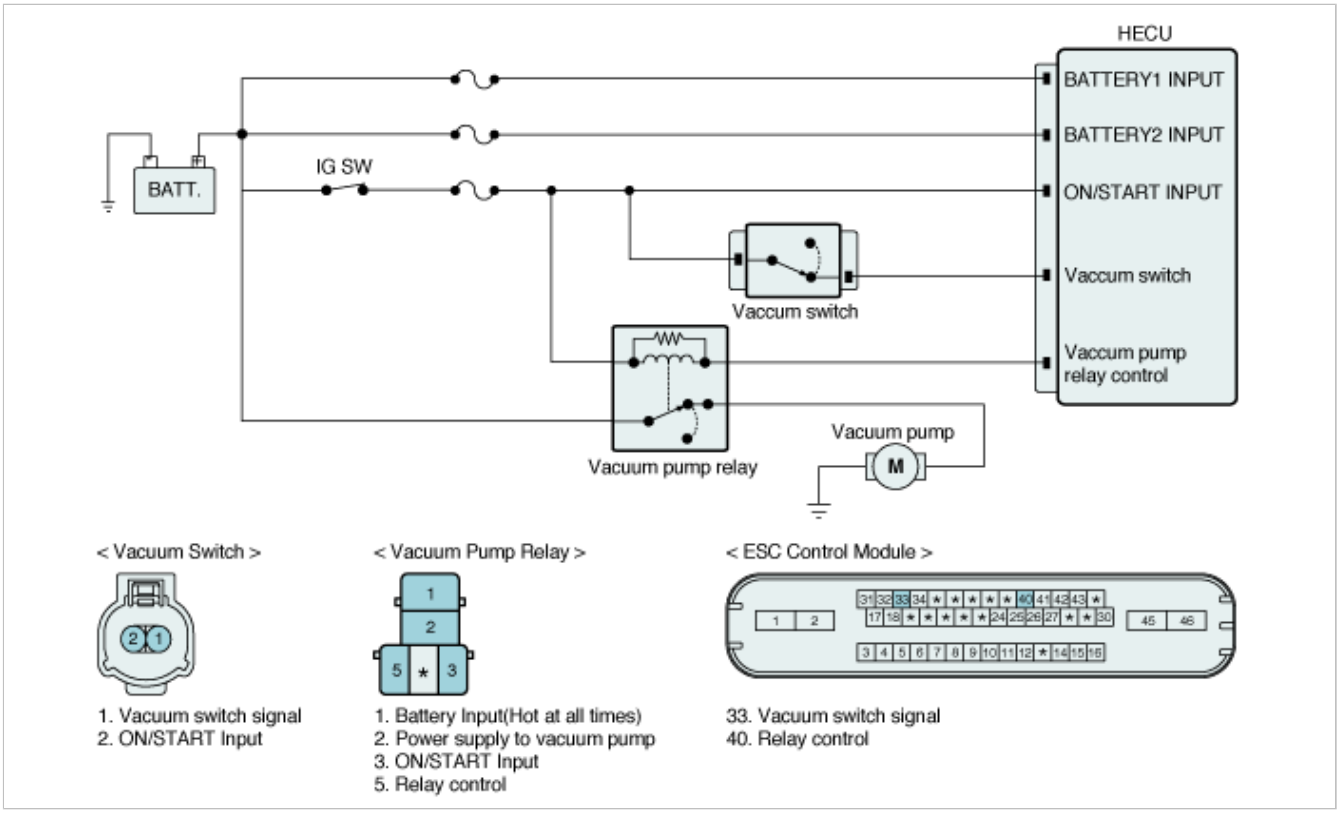

Terminal and Connector Inspection

1. Many malfunctions in the electrical system are caused by poor harness(es) and terminal condition. Faults can also be caused by interference from other electrical systems, and mechanical or chemical damage.

2. Thoroughly check connectors for looseness, poor connection, bending, corrosion, contamination, deterioration, or damage.
3. Has a problem been found?

YES	▸ Repair as necessary and then go to "Verification of Vehicle Repair" procedure.
NO	▸ Go to "Power Circuit Inspection" procedure.

Power Circuit Inspection

■ Open or Short Check

1. Ignition "OFF"
2. Disconnect Vacuum Pump Relay.
3. Ignition "ON" & Engine "OFF"
4. Measure voltage between power terminal of Vacuum Pump Relay harness connector and chassis ground.

Specification : Battery voltage

5. Is the measured value within specifications?

YES	▸ Go to "Control Circuit Inspection" procedure.
NO	▸ Check for open or blown fuse referring to "Circuit Diagram". Repair open or short in power circuit between battery and the realy and then, Go to "Verification of vehicle Repair" procedure.

Control Circuit Inspection

■ Open Check

1. Ignition "OFF"
2. Disconnect Vacuum Pump Relay and HECU connector.
3. Measure resistance between control terminal of Vacuum Pump Relay harness connector and Vacuum Pump Relay control terminal of HECU harness connector.

Specification : Approx. below 1Ω

4. Is the measured value within specifications?

YES	▸ Go to "Short Check" procedure.
NO	▸ Repair open in control circuit between the vacuum pump relay and HECU and then, Go to "Verification of vehicle Repair" procedure.

■ Short Check

1. Ignition "OFF"
2. Disconnect Vacuum Pump Relay and HECU connector.
3. Measure resistance between control terminal of Vacuum Pump Relay harness connector and chassis ground.

Specification : Infinite (∞ Ω)

4. Is the measured value within specifications?

YES	▸ Substitute with a known-good Vacuum Pump Relay and check for proper operation. If problem is corrected, replace Vacuum Pump Relay and then go to "Verification of Vehicle Repair"

	procedure.
NO	▶ Repair short in control circuit between Vacuum Pump Relay and HECU, and then go to "Verification of vehicle Repair" procedure.

Verification of Vehicle Repair

After a repair, it is essential to verify that the fault has been corrected.

1. Connect scantool and select "Diagnostic Trouble Codes(DTCs)" mode.
2. Using a scantool, Clear DTC.
3. Operate the vehicle within DTC Detecting Condition in General Information.
4. Using a scantool, Check DTC present.
5. Are any DTCs present ?

YES	▶ Go to the applicable troubleshooting procedure.
NO	▶ System performing to specification at this time.

General Description

BTCS (Brake Traction Control System) is operated when the value (Wheel acceleration value + speed difference value) exceeds the specified value when vehicle speed is lower than the 50 Km/h.
The BTCS intalled HECU calculates the DISC temperature logically, which is an assumed value, by using the value of Wheel speed, vehicle speed change, CONTROL MODE and BLS SIGNAL.
Assumed DISC Temperature is used to protect DISC overheating, caused by long-time operation, which may cause a decrease in brake efficiency.

DTC Description

If the HECU decides that the Disc is over-heated (above 500℃), then it turns the ESC lamp ON and inhibits BTCS operation to protect overheating of the disc.
If the calculated temperature becomes lower than specified value (arrox. 300℃), then the HECU turns the ESC lamp OFF and operates the BTCS again.

DTC Detecting Condition

Item	Detecting Condition	Possible cause
DTC Strategy	• Internal monitoring	• Brake disk over heat
Enable Conditions	• When the calculated temperature of disc is higher than predefined value(500℃). If the calculated temperature drops below 300℃, the controller recovers to normal state. - When IGN switched OFF, HECU calculate temperature of disc until calculated temperature drops below 80℃ by BATT1 power.	
Fail Safe	• Inhibit the ESC control and allow the ABS/EBD control. • The ESC warning lamp is activated.	

Component Inspection

1. Wait untill the brake disc cool down sufficiently.
2. Ignition "OFF" & Engine "OFF".
3. Ignition "ON" & Engine "OFF".
4. Connect scantool and select "Diagnostic Trouble Codes(DTCs)" mode.
5. Using a scantool, Clear DTC.
6. Select "Diagnostic Trouble Codes(DTCs)" mode again.
7. Are any DTCs present ?

YES	▸ Substitute with a known-good HECU and check for proper operation. If problem is corrected, replace HECU and then go to "Verification of Vehicle Repair"procedure.
NO	▸ Fault is caused by Faulty HECU or was repaired and HECU memory was not cleared. The DTC code can be set by excessive TCS control in normal system status. Go to "Verification of Vehicle Repair" procedure.

Verification of Vehicle Repair

After a repair, it is essential to verify that the fault has been corrected.

1. Connect scantool and select "Diagnostic Trouble Codes(DTCs)" mode.
2. Using a scantool, Clear DTC.
3. Operate the vehicle within DTC Detecting Condition in General Information.
4. Using a scantool, Check DTC present.
5. Are any DTCs present ?

YES	▸ Go to the applicable troubleshooting procedure.
NO	▸ System performing to specification at this time.

General Description

The Vacuum Pump System is set up in a vehicle in order to make the vacuum enough when a drvier presses the brake pedal on the high ground. To operate this system, the vacuum pump is installed on a vehicle.
If the vacuum is not sufficient to press the brake pedal, the HECU senses it through the vacuum switch, which is installed on booster. And then the HECU supplies the power to the vacuum pump by grounding the circuit of the vacuum pump relay. When the vacuum pump is supplied with electric power, it makes the vacuum and supplements it to the booster.

DTC Description

The HECU monitors the vacuum pump system for a normal operation and if it senses that there is a problem in the vacuum pump system, this DTC is set.

DTC Detecting Condition

Item	Detecting Condition	Possible cause
DTC Strategy	• System Monitoring	• Poor connection • Faulty vacuum pump • Faulty vacuum switch • Faulty HECU
Enable Conditions	• After the consecutive 2 operation cycles, the vacuum switch's signal is "ON"	
Fail Safe	• -	

Diagnostic Circuit Diagram

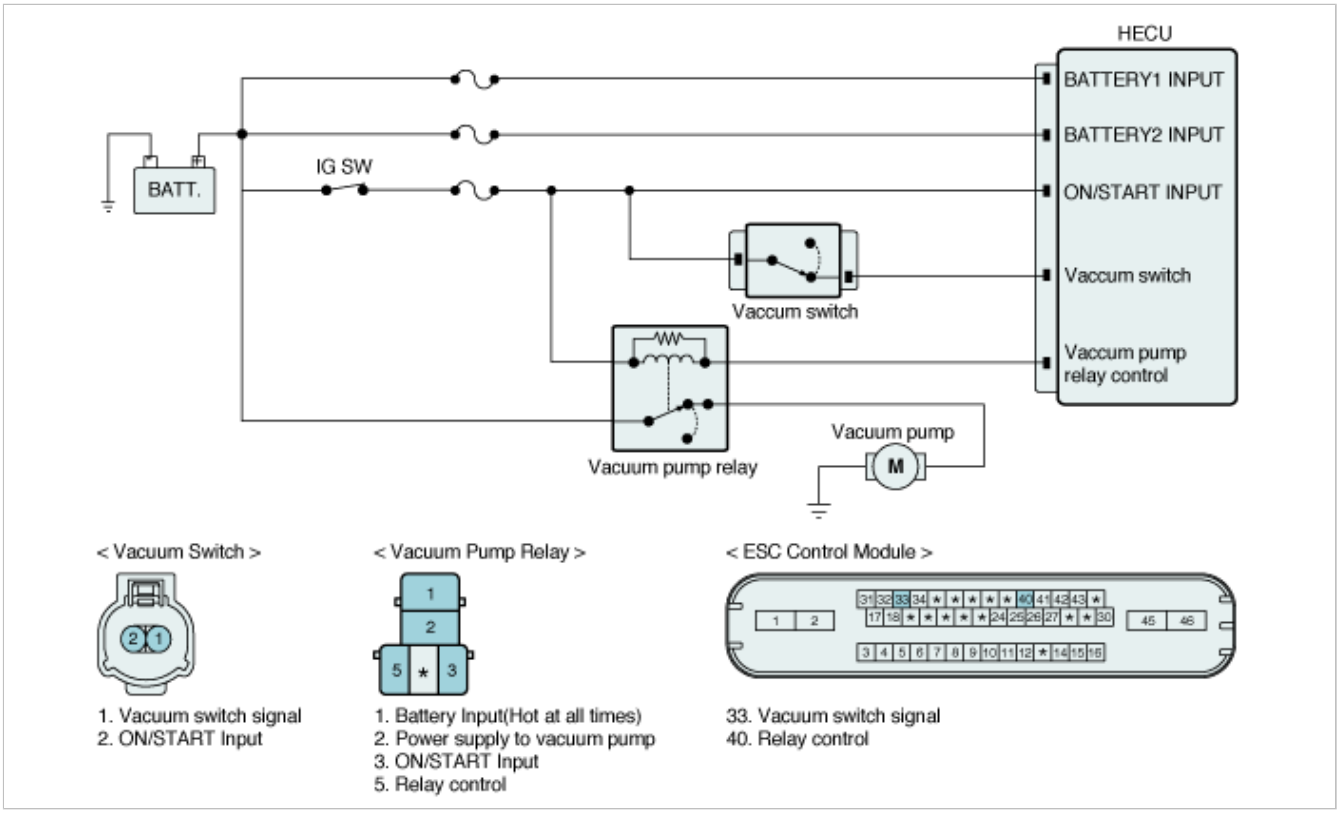

Terminal and Connector Inspection

1. Many malfunctions in the electrical system are caused by poor harness(es) and terminal condition. Faults can also be caused by interference from other electrical systems, and mechanical or chemical damage.
2. Thoroughly check connectors for looseness, poor connection, bending, corrosion, contamination, deterioration, or damage.
3. Has a problem been found?

YES	▶ Repair as necessary and then go to "Verification of Vehicle Repair" procedure.
NO	▶ Go to "Component Inspection" procedure.

Component Inspection

1. Ignition "OFF" & Engine "OFF".
2. Disconnect the vacuum pump connector.
3. Supply the vacuum pump with the electric power(12V).
   (At the same time, Connect the ground terminal of the vacuum pump connector to a chassis ground)
4. Check if the vacuum pump is running normally.
5. Does the vacuum pump operate well?

YES	▶ 1) Substitute with a known-good vacuum switch and check for proper operation. If problem is corrected, replace it and then go to "Verification of Vehicle Repair" procedure. 2) Substitute with a known-good HECU and check for proper operation. If problem is corrected, replace it and then go to "Verification of Vehicle Repair" procedure.
NO	▶ Substitute with a known-good vacuum pump and check for proper operation. If problem is corrected, replace it and then go to "Verification of Vehicle Repair" procedure.

Verification of Vehicle Repair

After a repair, it is essential to verify that the fault has been corrected.

1. Connect scantool and select "Diagnostic Trouble Codes(DTCs)" mode.
2. Using a scantool, Clear DTC.
3. Operate the vehicle within DTC Detecting Condition in General Information.
4. Using a scantool, Check DTC present.
5. Are any DTCs present ?

YES	▶ Go to the applicable troubleshooting procedure.
NO	▶ System performing to specification at this time.

General Description

The ABS HECU is composed of a ECU (Electronic Control Unit) and an HCU(Hydraulic Control Unit), so the HECU hardware includes all solenoid valves inside the unit as well as the ECU.
Solenoid valves are switched to ON, OFF by HECU when the ABS is activated. Solenoid valves function is to increase, decrease or maintain the hydralic pressure supplied to a wheel cylinder.

DTC Description

The HECU monitors the operation of the valves by checking the drive circuit of the solenid valves, and then sets this code when the unexpcted drive voltage is detected.
For example, the HECU sets the DTC if an unexpected high drive voltage is detected when the valve relay is switched to OFF. (or unexpected low voltage is detected when the solenoid valve drive TR is switched to ON)

DTC Detecting Condition

Item	Detecting Condition	Possible cause
DTC Strategy	• Internal monitoring	• Faulty HECU
Enable Conditions	• If the valve relay is switched ON and corresponding solenoid driver OFF and the voltage of solenoid < 3.5±0.5V continuously for 56ms, the failure is detected. • If the valve relay is switched ON and corresponding solenoid driver ON and the voltage of solenoid > 1.5±0.5V continuously for 56ms, the failure is detected.	
Fail Safe	• The ABS/EBD/ESC functions are inhibited. • The ABS/EBD/ESC warning lamps are activated.	

Diagnostic Circuit Diagram

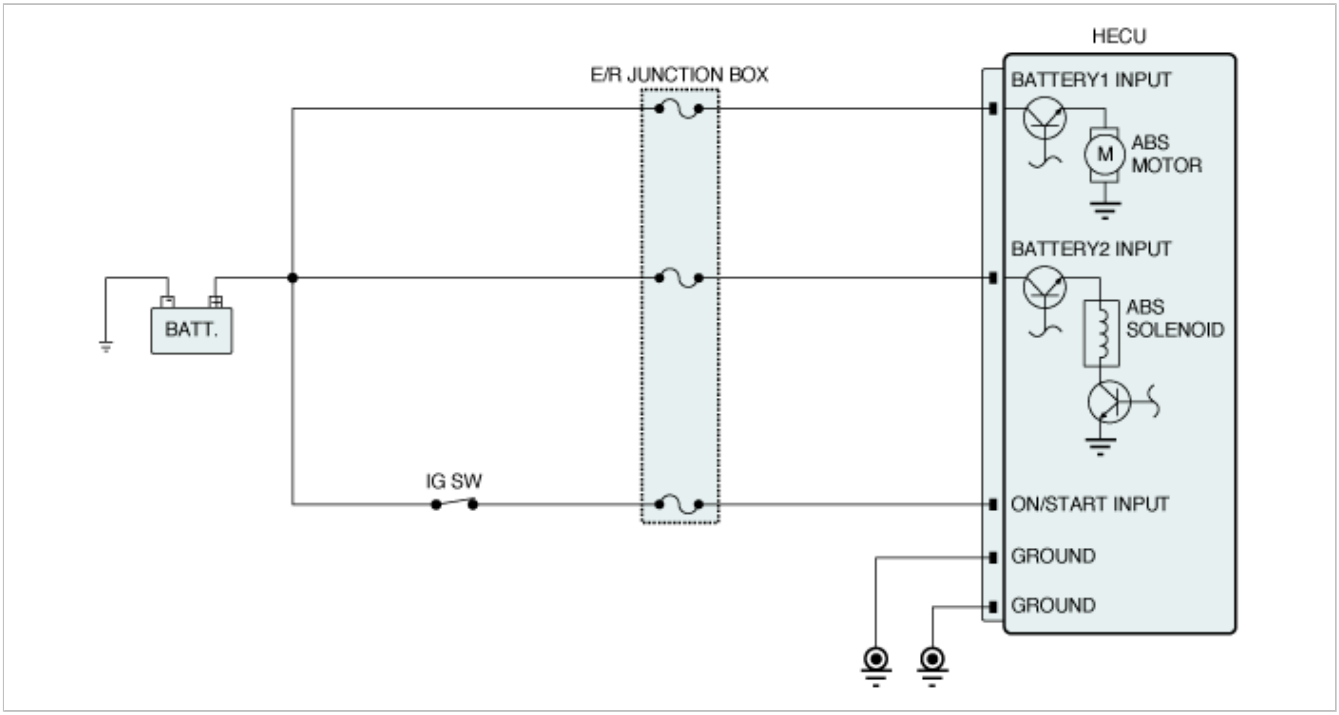

Terminal and Connector Inspection

1. Many malfunctions in the electrical system are caused by poor harness(es) and terminal condition. Faults can also be caused by interference from other electrical systems, and mechanical or chemical damage.
2. Thoroughly check connectors for looseness, poor connection, bending, corrosion, contamination, deterioration, or

damage.

3. Has a problem been found?

YES	▸ Repair as necessary and then go to "Verification of Vehicle Repair" procedure.
NO	▸ Go to "Component Inspection" Procedure.

Component Inspection

1. Ignition "OFF" & Engine "OFF".
2. Ignition "ON" & Engine "OFF".
3. Connect scantool and select "Diagnostic Trouble Codes(DTCs)" mode.
4. Using a scantool, Clear DTC.
5. Select "Diagnostic Trouble Codes(DTCs)" mode again.

6Are any DTCs present ?

YES	▸ Substitute with a known-good HECU and check for proper operation. If problem is corrected, replace HECU and then go to "Verification of Vehicle Repair" procedure.
NO	▸ Fault is intermittent caused by faulty HECU or was repaired and HECU memory was not cleared. Go to "Verification of Vehicle Repair" procedure.

Verification of Vehicle Repair

After a repair, it is essential to verify that the fault has been corrected.

1. Connect scantool and select "Diagnostic Trouble Codes(DTCs)" mode.
2. Using a scantool, Clear DTC.
3. Operate the vehicle within DTC Detecting Condition in General Information. (Start and drive vehicle in gear and maintain vehicle speed at or above 40kmh. (24mph))
4. Using a scantool, Check DTC present.
5. Are any DTCs present ?

YES	▸ Go to the applicable troubleshooting procedure.
NO	▸ System performing to specification at this time.

General Description

The ABS ECU supplies battery power to the electric motor by way of a motor relay which is controlled by the Electronic Control Unit(ECU).
The electric motor pump supplies hydraulic pressure to all wheel brake calipers by operating the piston inside the pump.

DTC Description

The ABS ECU monitors the pump motor relay or fuse open, open or short in motor or motor lock and then sets this code if a malfunction is detected.

DTC Detecting Condition

Item		Detecting Condition	Possible cause
DTC Strategy		• Battery Voltage Monitoring	• Open or short of power supply circuit • Blown fuse • Faulty HECU
Case1 (Motor Relay Open orMotor Short to GND)	Enable Conditions	• If the motor relay is switched ON and motor voltage < (IGN voltage – 4V±0.5V) continued for 49msec, the failure is detected.	
Case2 (Motor Lock)	Enable Conditions	• After motor relay is switched OFF, VMR is measured. If the time which VMR > 1±0.1V is less than evaluation time, recheck is performed again for a maximum of three times. When VMR is not normal even on the third recheck, the controller recognizes it as failure.	
Case3 (Motor Open, Motor Short to BATT)	Enable Conditions	• After 1.8sec from the time that motor relay is switched OFF, VMR > 4±0.5V continued for 1.8sec, the failure is detected.	
Case4 (Motor Fuse Open)	Enable Conditions	• If the motor relay is switched OFF and VMRP (Motor power supply voltage) < 4±0.5V continued for 1sec, the failure is detected.	
Fail Safe		• ABS/ESC functions are inhibited, EBD function is allowed and the ABS/ESC warning lamps are activated.	

Diagnostic Circuit Diagram

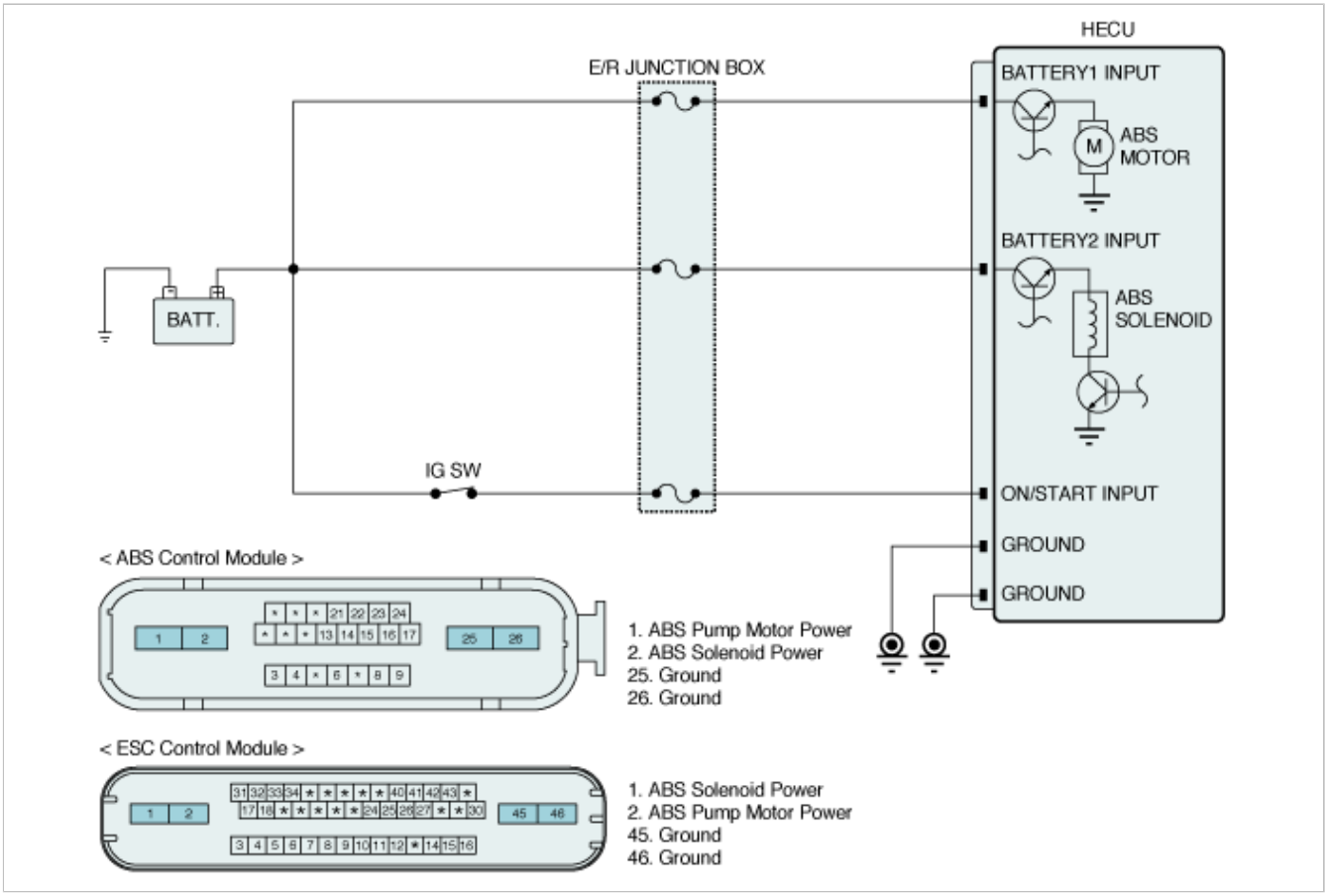

Terminal and Connector Inspection

1. Many malfunctions in the electrical system are caused by poor harness(es) and terminal condition. Faults can also be caused by interference from other electrical systems, and mechanical or chemical damage.
2. Thoroughly check connectors for looseness, poor connection, bending, corrosion, contamination, deterioration, or damage.
3. Has a problem been found?

YES	▸ Repair as necessary and then go to "Verification of Vehicle Repair" procedure.
NO	▸ Go to "Power Circuit Inspection" procedure.

Power Circuit Inspection

■ Open or Short Check

1. Ignition "ON" & Engine "OFF".
2. Measure voltage between power terminal of the HECU harness connector and chassis ground.

Specification : B+

3. Is the measured value within specifications?

YES	▸ Go to "Ground Circuit Inspection" procedure.
NO	▸ Check for open or blown fuse referring to "Circuit Diagram". Repair open or short in power circuit between battery and HECU harness connector and then, go to "Verification of vehicle Repair" procedure.

Ground Circuit Inspection

■ **Open or Short Check**

1. Ignition "OFF" & Engine "OFF".
2. Disconnect the HECU connector.
3. Measure resistance between ground terminal of the HECU harness connector and chassis ground.

Specification : Approx. below 1Ω

4. Is the measured value within specifications?

YES	▸ Substitute with a known-good HECU and check for proper operation. If problem is corrected, replace HECU and then go to "Verification of Vehicle Repair"procedure.
NO	▸ Repair open or short in ground circuit between HECU harness connector and chassis ground, and then go to "Verification of vehicle Repair" procedure.

Verification of Vehicle Repair

After a repair, it is essential to verify that the fault has been corrected.

1. Connect scantool and select "Diagnostic Trouble Codes(DTCs)" mode.
2. Using a scantool, Clear DTC.
3. Operate the vehicle within DTC Detecting Condition in General Information. (Start and drive vehicle in gear and maintain vehicle speed at or above 12kmh. (7.5mph)
4. Using a scantool, Check DTC present.
5. Are any DTCs present ?

YES	▸ Go to the applicable troubleshooting procedure.
NO	▸ System performing to specification at this time.

Description

When the vehicle is turning with respect to a vertical axis the yaw rate sensor detects the yaw rate electronically by the vibration change of plate fork inside the yaw rate sensor.
If yaw velocity reaches the specific velocity after it detects the vehicle' yawing, the ESC control is reactivated.
The later G sensor senses vehicle's lateral G. A small element inside the sensor is attached to a deflectable lever arm by later G.
Direction and magnitude of lateral G loaded to vehicle can be known with electrostatic capacity changing according to lateral G.
It interchanges signals with HECU through extra CAN line which only used for communication between HECU and sensor.

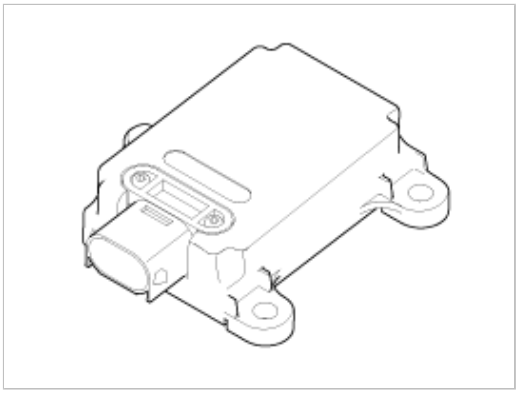

Specifications

Description		Specification	Remarks
Operating voltage		8 ~ 17V	
Output signal		CAN Interface	
Operating temperature		-40 ~ 85°C(-40 ~ 185°F)	
Yaw-rate sensor	Measurement range	-75 ~ 75°/sec	
	Frequency response	18 ~ 22Hz	
Lateral G sensor	Measurement range	-1.5 ~ 1.5g	
	Frequency response	50Hz±60%	

External Diagram

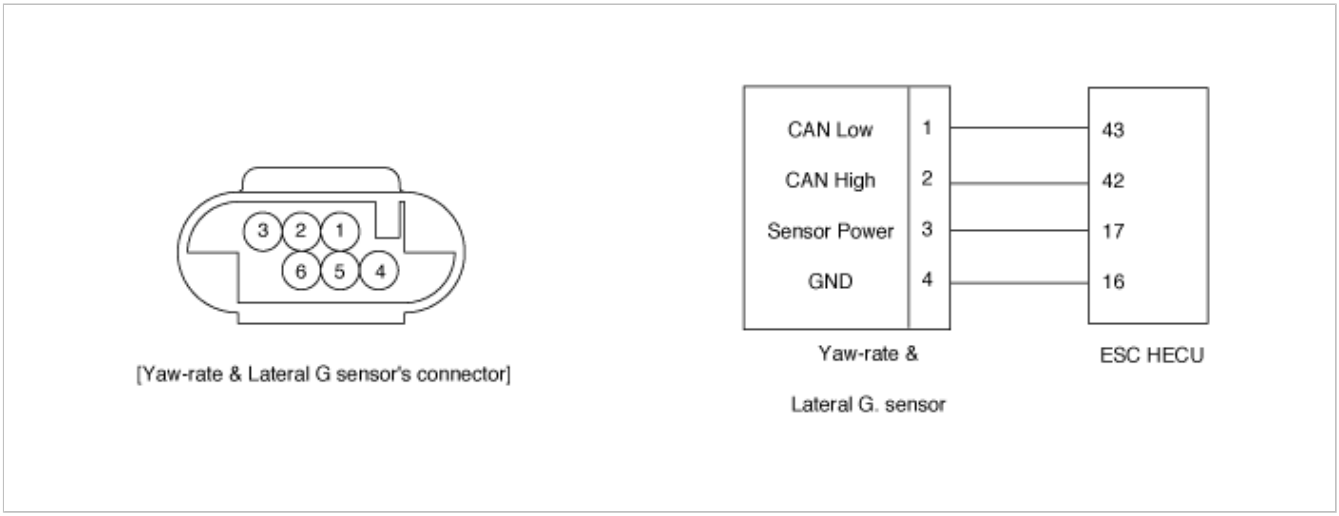

Removal

1. Turn ignition switch OFF and disconnect the negative (-) battery cable.
2. Remove the floor console. (Refer to the Body group-console)
3. Disconnect the yaw rate & lateral G sensor connector.
4. Remove the mounting bolts (A).

Tightening torque:
7.9 ~ 10.8 N.m (0.8 ~ 1.1 kgf.m, 5.8 ~ 8.0 lb-ft)

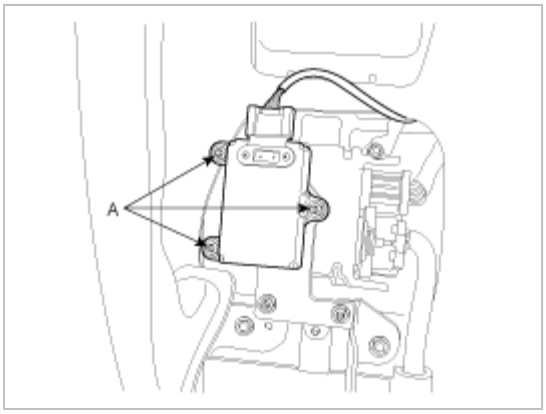

5. Installation is the reverse of removal.

Description

1. The ESC OFF switch is for the user to turn off the ESC system.
2. The ESC OFF lamp is on when ESC OFF switch is engaged.

Inspection

1. Turn ignition switch OFF and disconnect the negative (-) battery cable.
2. Remove the crash pad side cover. (Refer to the Body group-crash pad)
3. Remove the crash pad lower panel. (Refer to the Body group-crash pad)
4. Remove the lower crash pad switch assembly by using the scraper and then disconnect the connectors.

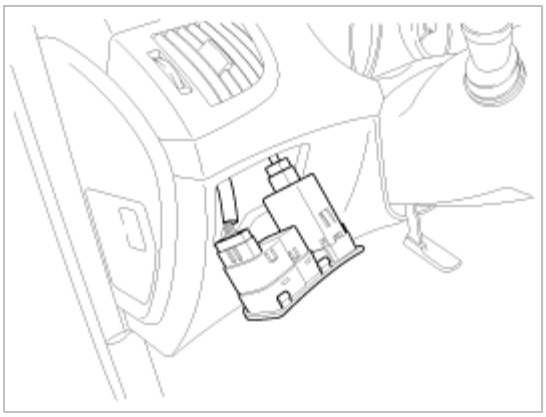

5. Check the continuity between the switch terminals as the ESC OFF switch is engaged.

Position \ Terminal	1	4	2	5
ON	○	○	○	○
OFF				

Description

The steering angle sensor detects the angle of the steering wheel in order to which direction a user chooses. The sensor is detached on the MPS(Mutil-Function Switch) under the steering wheel.

Measureing principle

The split of the steering angle sensor detects a steering angle of the steering wheel by a ON/OFF pulse caused by whether or not the LED lights go through the hole of the split, rotating as the steering wheel revolves. There are three LEDs, two (ST1, ST2) for detecting a steering direction, and the other for the neutral position.The HECU calculates the steering angle by the pulse from the steering angle sensor.

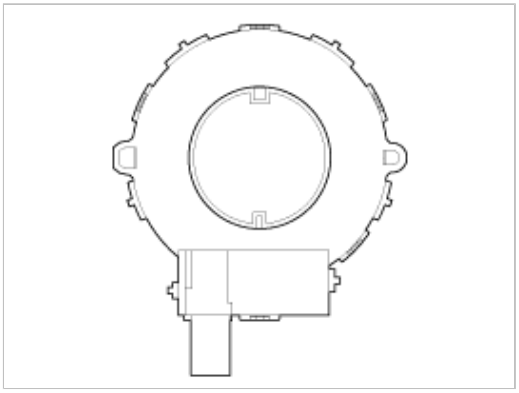

Specification

Description	Specification
Operating voltage	8 ~ 16 V
Operating temperature	-30 ~ 75 °C
Current consumption	Max.100 mA
Steering angle velocity	Max. ± 1500 °/sec

Circuit diagram(Steering wheel angle sensor)

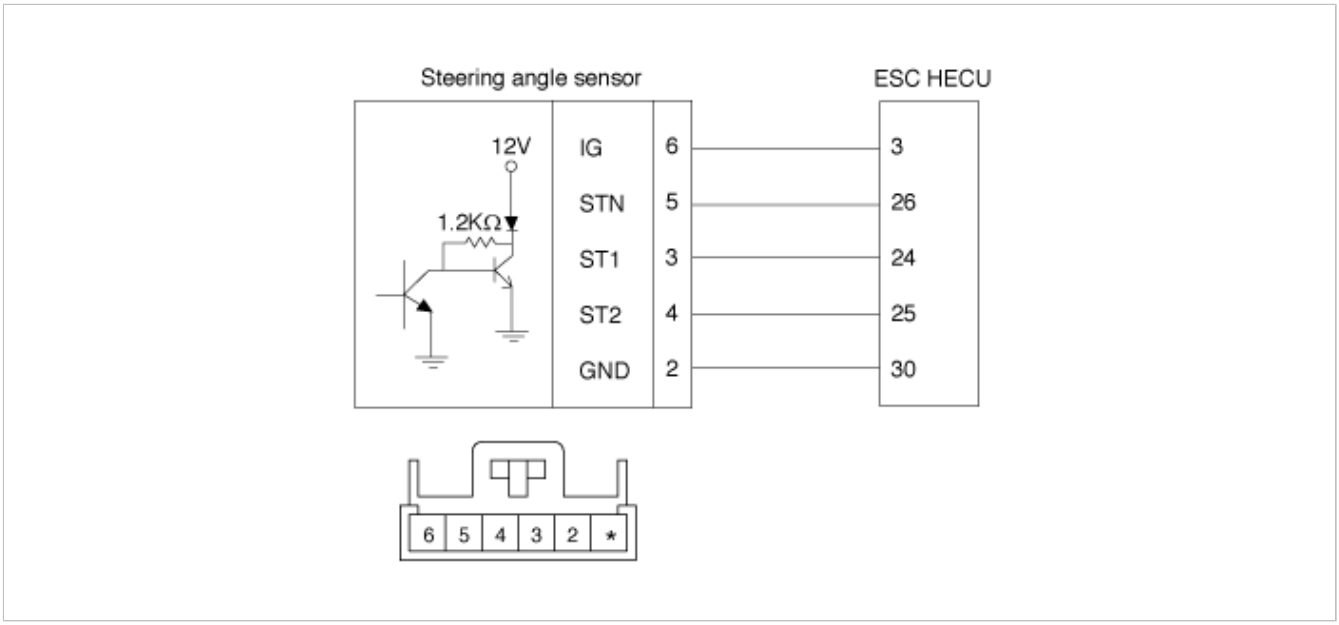

Output characteristic

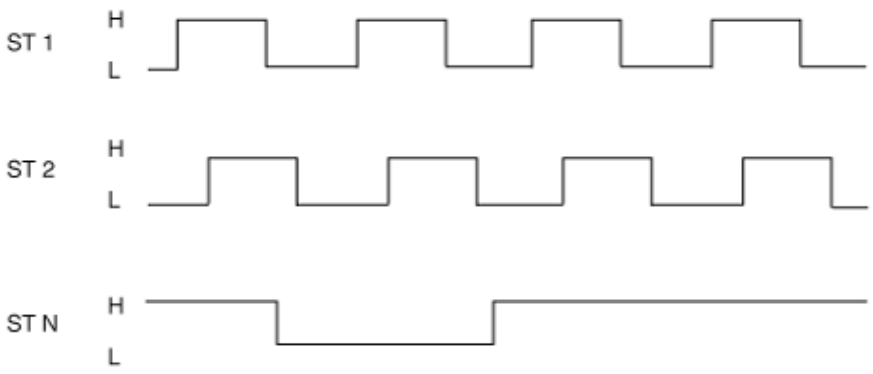

No.	Input		Output	Steering direction	Remark
1	ST1	L	L	Right	
	ST2	L	H		
	ST1	L	H	Left	
	ST2	L	L		
2	ST1	L	L	Left	
	ST1	H	L		
	ST1	L	H	Right	
	ST2	H	H		
3	ST1	H	H	Left	
	ST2	L	H		
	ST1	H	L	Right	
	ST2	L	L		
4	ST1	H	H	Right	
	ST2	H	L		
	ST1	H	L	Left	
	ST2	H	H		